Consultative Committee for Space Data Systems

DRAFT RECOMMENDATION FOR SPACE DATA SYSTEM STANDARDS

COMMUNICATIONS OPERATION PROCEDURE-1

CCSDS 232.1-R-1

RED BOOK

July 2002

AUTHORITY

Issue:	Red Book, Issue 1
Date:	July 2002
Location:	Not Applicable

(WHEN THIS RECOMMENDATION IS FINALIZED, IT WILL CONTAIN THE FOLLOWING STATEMENT OF AUTHORITY:)

This document has been approved for publication by the Management Council of the Consultative Committee for Space Data Systems (CCSDS) and represents the consensus technical agreement of the participating CCSDS Member Agencies. The procedure for review and authorization of CCSDS Recommendations is detailed in the *Procedures Manual for the Consultative Committee for Space Data Systems*, and the record of Agency participation in the authorization of this document can be obtained from the CCSDS Secretariat at the address below.

This Recommendation is published and maintained by:

CCSDS Secretariat
Program Integration Division (Code M-3)
National Aeronautics and Space Administration
Washington, DC 20546, USA

STATEMENT OF INTENT

(WHEN THIS RECOMMENDATION IS FINALIZED, IT WILL CONTAIN THE FOLLOWING STATEMENT OF INTENT)

The Consultative Committee for Space Data Systems (CCSDS) is an organization officially established by the management of member space Agencies. The Committee meets periodically to address data systems problems that are common to all participants, and to formulate sound technical solutions to these problems. Inasmuch as participation in the CCSDS is completely voluntary, the results of Committee actions are termed **Recommendations** and are not considered binding on any Agency.

This **Recommendation** is issued by, and represents the consensus of, the CCSDS Plenary body. Agency endorsement of this **Recommendation** is entirely voluntary. Endorsement, however, indicates the following understandings:

– Whenever an Agency establishes a CCSDS-related **standard**, this **standard** will be in accord with the relevant **Recommendation**. Establishing such a **standard** does not preclude other provisions which an Agency may develop.

– Whenever an Agency establishes a CCSDS-related standard, the Agency will provide other CCSDS member Agencies with the following information:

• The **standard** itself.

• The anticipated date of initial operational capability.

• The anticipated duration of operational service.

– Specific service arrangements are made via memoranda of agreement. Neither this Recommendation nor any ensuing standard is a substitute for a memorandum of agreement.

No later than five years from its date of issuance, this **Recommendation** will be reviewed by the CCSDS to determine whether it should: (1) remain in effect without change; (2) be changed to reflect the impact of new technologies, new requirements, or new directions; or, (3) be retired or canceled.

In those instances when a new version of a **Recommendation** is issued, existing CCSDS-related Agency standards and implementations are not negated or deemed to be non-CCSDS compatible. It is the responsibility of each Agency to determine when such standards or implementations are to be modified. Each Agency is, however, strongly encouraged to direct planning for its new standards and implementations towards the later version of the Recommendation.

FOREWORD

(WHEN THIS RECOMMENDATION IS FINALIZED, IT WILL CONTAIN THE FOLLOWING FOREWORD:)

This document is a technical **Recommendation** for use in developing flight and ground systems for space missions and has been prepared by the **Consultative Committee for Space Data Systems** (CCSDS). The Communications Operation Procedure-1 (COP-1) described herein is intended for missions that are cross-supported between Agencies of the CCSDS.

This **Recommendation** specifies an automatic retransmission procedure to be used by space missions to transfer space application data over a ground-to-space or space-to-space communications link. This **Recommendation** has been developed from an existing CCSDS Recommendation that specifies Command Operation Procedure-1 (reference [B2]), which defines essentially the same procedure but in a slightly different context.

This **Recommendation** does not change the basic technical contents defined in [B2], but the name of the procedure and the presentation of the specification have been changed so that:

a) COP-1 can be used to transfer any data over any space link in either direction;

b) the specification matches the Open Systems Interconnection (OSI) Basic Reference Model (references [2] and [3]).

The most notable change in presentation is that COP-1 is defined as a procedure in the Data Link Layer of the OSI Model in this **Recommendation**, whereas it is defined as a procedure in the Transfer Layer (a sublayer of the Data Link Layer) in reference [B2].

Together with the change in presentation, a few technical details in [B2] have been changed based upon experience in using this procedure. Also, some technical terms in reference [B2] have been changed in order to unify the terminology used in all CCSDS Recommendations that define space link protocols. These changes are listed in annex D of this **Recommendation**.

Through the process of normal evolution, it is expected that expansion, deletion or modification to this document may occur. This Recommendation is therefore subject to CCSDS document management and change control procedures, as defined in the *Procedures Manual for the Consultative Committee for Space Data Systems* [B1]. Current versions of CCSDS documents are maintained at the CCSDS Web site:

http://www.ccsds.org/

Questions relating to the contents or status of this document should be addressed to the CCSDS Secretariat at the address indicated on page i.

At time of publication, the active Member and Observer Agencies of the CCSDS were:

Member Agencies

- Agenzia Spaziale Italiana (ASI)/Italy.
- British National Space Centre (BNSC)/United Kingdom.
- Canadian Space Agency (CSA)/Canada.
- Centre National d'Etudes Spatiales (CNES)/France.
- Deutsches Zentrum für Luft- und Raumfahrt e.V. (DLR)/Germany.
- European Space Agency (ESA)/Europe.
- Instituto Nacional de Pesquisas Espaciais (INPE)/Brazil.
- National Aeronautics and Space Administration (NASA)/USA.
- National Space Development Agency of Japan (NASDA)/Japan.
- Russian Space Agency (RSA)/Russian Federation.

Observer Agencies

- Austrian Space Agency (ASA)/Austria.
- Central Research Institute of Machine Building (TsNIIMash)/Russian Federation.
- Centro Tecnico Aeroespacial (CTA)/Brazil.
- Chinese Academy of Space Technology (CAST)/China.
- Commonwealth Scientific and Industrial Research Organization (CSIRO)/Australia.
- Communications Research Centre (CRC)/Canada.
- Communications Research Laboratory (CRL)/Japan.
- Danish Space Research Institute (DSRI)/Denmark.
- European Organization for the Exploitation of Meteorological Satellites (EUMETSAT)/Europe.
- European Telecommunications Satellite Organization (EUTELSAT)/Europe.
- Federal Service of Scientific, Technical & Cultural Affairs (FSST&CA)/Belgium.
- Hellenic National Space Committee (HNSC)/Greece.
- Indian Space Research Organization (ISRO)/India.
- Institute of Space and Astronautical Science (ISAS)/Japan.
- Institute of Space Research (IKI)/Russian Federation.
- KFKI Research Institute for Particle & Nuclear Physics (KFKI)/Hungary.
- MIKOMTEK: CSIR (CSIR)/Republic of South Africa.
- Korea Aerospace Research Institute (KARI)/Korea.
- Ministry of Communications (MOC)/Israel.
- National Oceanic & Atmospheric Administration (NOAA)/USA.
- National Space Program Office (NSPO)/Taipei.
- Swedish Space Corporation (SSC)/Sweden.
- United States Geological Survey (USGS)/USA.

PREFACE

This document is a draft CCSDS Recommendation. Its Red Book status indicates that the CCSDS believes the document to be technically mature and has released it for formal review by appropriate technical organizations. As such, its technical contents are not stable, and several iterations of it may occur in response to comments received during the review process. Implementers are cautioned **not** to fabricate any final equipment in accordance with this document's technical content.

DOCUMENT CONTROL

Document	Title and Issue	Date	Status
CCSDS 232.1-R-1	Communications Operation Procedure-1, Issue 1	July 2002	Original Issue

CONTENTS

Section Page

1 INTRODUCTION 1-1

1.1 PURPOSE 1-1
1.2 SCOPE 1-1
1.3 APPLICABILITY 1-1
1.4 RATIONALE 1-2
1.5 DOCUMENT STRUCTURE 1-2
1.6 CONVENTIONS AND DEFINITIONS 1-3
1.7 NORMATIVE REFERENCES 1-4

2 OVERVIEW 2-1

2.1 CONCEPT OF COP-1 2-1
2.2 SERVICE TYPES 2-2
2.3 HOW TO READ THIS DOCUMENT 2-4

3 INTER-PROCEDURE INTERFACES 3-1

3.1 DEFINITIONS 3-1
3.2 INTER-PROCEDURE INTERFACES AT THE SENDING END 3-1
3.3 INTER-PROCEDURE INTERFACES AT THE RECEIVING END 3-6

4 DETAILED SERVICE DEFINITION 4-1

4.1 DIRECTIVE REQUEST 4-1
4.2 DIRECTIVE NOTIFICATION 4-3
4.3 ASYNCHRONOUS NOTIFICATION 4-4
4.4 TRANSFER NOTIFICATION 4-6

5 FOP-1 5-1

5.1 FOP-1 VARIABLES 5-1
5.2 FOP-1 ACTIONS 5-9
5.3 FOP-1 STATE TABLE 5-13

6 FARM-1 6-1

6.1 FARM-1 VARIABLES 6-1
6.2 FARM-1 ACTIONS 6-6
6.3 FARM-1 STATE TABLE 6-7

CONTENTS (continued)

Section Page

7 MANAGED PARAMETERS 7-1

7.1 OVERVIEW OF MANAGED PARAMETERS 7-1
7.2 FOP-1 MANAGED PARAMETERS 7-1
7.3 FARM-1 MANAGED PARAMETERS 7-1

ANNEX A GLOSSARY A-1
ANNEX B INFORMATIVE REFERENCES B-1
ANNEX C STATE TABLE FORMAT C-1
ANNEX D CHANGES FROM REFERENCE [B2] D-1

Figure

2-1 COP-1 Variables, Frame and Report Values 2-3
3-1 Internal Organization of Protocol Entity (Sending End) 3-2
3-2 Internal Organization of Protocol Entity (Receiving End) 3-7
5-4 FOP-1 State Transitions: Main Protocol 5-23
5-5 FOP-1 State Transitions: Initialization Protocol 5-24
5-6 FOP-1 State Transitions 5-25
6-1 FARM Sliding Window Concept 6-4
6-2 FARM-1 State Transitions 6-12
C-1 Mapping of Terms That Have Been Changed C-1

Table

4-1 Directive Types 4-2
4-2 Notification Types for DIRECTIVE_Notify.indication 4-3
4-3 Notification Types for Async_Notify.indication 4-4
4-4 Reasons for the 4-5
4-5 Notification Types for XXX_Notify.indication 4-7
4-6 Notification Types for Transfer Notification Signal 4-7
5-7 FOP-1 State Table 5-16
6-1 Table 6-1: FARM-1 State Table 6-10
7-1 FOP-1 Managed Parameters 7-1
7-2 FARM-1 Managed Parameters 7-2
D-1 Mapping of Terms That Have Been Changed D-2

1 INTRODUCTION

1.1 PURPOSE

The purpose of this draft Recommendation is to specify the Communications Operation Procedure-1 (COP-1). This procedure is used with the Telecommand (TC) Space Data Link Protocol [3] to enable the delivery of service data units to the receiving end of the layer above, correct and without omission or duplication, and in the same sequential order in which they were received from the layer above at the sending end.

It is assumed that the reader of this document is familiar with the data structures and terminology contained in reference [3].

1.2 SCOPE

This draft Recommendation defines the COP-1 in terms of:

a) the interfaces with the other procedures;

b) the internal variables used by the protocol entity;

c) the actions performed by the protocol entity; and

d) the state transitions of the protocol entity.

It does not specify:

a) individual implementations or products;

b) the implementation of service interfaces within real systems;

c) the methods or technologies required to perform the procedures; or

d) the management activities required to configure and control the protocol.

In case of conflict between reference [3] and this draft Recommendation, this draft Recommendation will take precedence.

1.3 APPLICABILITY

This draft Recommendation applies to the creation of Agency standards and to the future data communications over space links between CCSDS Agencies in cross-support situations. This draft Recommendation includes comprehensive specification of the procedure for inter-Agency cross support. It is neither a specification of, nor a design for, real systems that may be implemented for existing or future missions.

The Recommendation specified in this document is to be invoked through the normal standards programs of each CCSDS Agency, and is applicable to those missions for which

cross support, based on capabilities described in this draft Recommendation, is anticipated. Where mandatory capabilities are clearly indicated in sections of this draft Recommendation, they must be implemented when this document is used as a basis for cross support. Where options are allowed or implied, implementation of these options is subject to specific bilateral cross support agreements between the Agencies involved.

This draft Recommendation is applicable only to those Projects that implement the TC Space Data Link Protocol [3].

1.4 RATIONALE

The CCSDS believes it is important to document the rationale underlying the recommendations chosen, so that future evaluations of proposed changes or improvements will not lose sight of previous decisions. The concept and rationale behind the decisions that formed the basis for this draft Recommendation are documented in reference [B3].

1.5 DOCUMENT STRUCTURE

This document is divided into seven numbered sections and three annexes:

a) Section 1 presents the purpose, scope, applicability and rationale of this draft Recommendation and lists the conventions, definitions, and normative references used throughout the draft Recommendation;

b) Section 2 provides an overview of the COP-1;

c) Section 3 describes the interfaces between COP-1 and the other procedures used in the TC Space Data Link Protocol;

d) Section 4 describes the detailed service definition related to COP-1, and complements the service definition of reference [3];

e) Section 5 specifies the Frame Operation Procedure-1 (FOP-1), which is the procedure used at the sending side of COP-1;

f) Section 6 specifies the Frame Acceptance and Reporting Mechanism-1 (FARM-1), which is the procedure used at the receiving side of COP-1;

g) Section 7 specifies the managed parameters used by COP-1;

h) Annex A lists all acronyms used within this document;

i) Annex B provides a list of informative references;

j) Annex C shows the format of the state tables used in sections 5 and 6;

k) Annex D lists the changes contained in this draft Recommendation as compared to the previously issued CCSDS COP Recommendation [B2].

1.6 CONVENTIONS AND DEFINITIONS

1.6.1 DEFINITIONS

1.6.1.1 Definitions from Open Systems Interconnection (OSI) Basic Reference Model

This draft Recommendation makes use of a number of terms defined in reference [1]. The use of those terms in this draft Recommendation shall be understood in a generic sense; i.e., in the sense that those terms are generally applicable to any of a variety of technologies that provide for the exchange of information between real systems. Those terms are:

a) blocking;

b) Data Link Layer;

c) entity;

d) flow control;

e) real system;

f) segmenting;

g) service;

h) Service Access Point (SAP);

i) service data unit.

1.6.1.2 Definitions from OSI Service Definition Conventions

This draft Recommendation makes use of a number of terms defined in reference [2]. The use of those terms in this draft Recommendation shall be understood in a generic sense; i.e., in the sense that those terms are generally applicable to any of a variety of technologies that provide for the exchange of information between real systems. Those terms are:

a) indication;

b) primitive;

c) request;

d) service provider;

e) service user.

1.6.1.3 Definitions from TC Space Data Link Protocol

This draft Recommendation makes use of the following terms defined in reference [3]:

a) Communications Link Control Word (CLCW);

b) Control Command;

c) Frame Data Unit (FDU);

d) Global Virtual Channel Identifier (GVCID);

e) Transfer Frame;

f) Type-A Service;

g) Type-A Transfer Frame;

h) Type-AD Transfer Frame;

i) Type-B Service;

j) Type-B Transfer Frame;

k) Type-BC Transfer Frame;

l) Type-BD Transfer Frame;

m) Virtual Channel Identifier (VCID);

n) Virtual Channel (VC).

1.6.2 NOMENCLATURE

The following conventions apply throughout this draft Recommendation:

a) the words ‘shall’ and ‘must’ imply a binding and verifiable specification;

b) the word ‘should’ implies an optional, but desirable, specification;

c) the word ‘may’ implies an optional specification;

d) the words ‘is’, ‘are’, and ‘will’ imply statements of fact.

1.7 NORMATIVE REFERENCES

The following documents contain provisions which, through reference in this text, constitute provisions of this draft Recommendation. At the time of publication, the editions indicated were valid. All documents are subject to revision, and users of this draft Recommendation are encouraged to investigate the possibility of applying the most recent editions of the documents indicated below. The CCSDS Secretariat maintains a register of currently valid CCSDS Recommendations.

[1] *Information Technology—Open Systems Interconnection—Basic Reference Model: The Basic Model*. International Standard, ISO/IEC 7498-1. 2nd ed. Geneva: ISO, 1994.

[2] *Information Technology—Open Systems Interconnection—Basic Reference Model—Conventions for the definition of OSI services*. International Standard, ISO/IEC 10731:1994. Geneva: ISO, 1994.

[3] *TC Space Data Link Protocol.* Recommendation for Space Data Systems Standards, CCSDS 232.0-R-1. Red Book. Issue 1. Washington, D.C.: CCSDS, December 2001.

NOTE – Informative references are listed in annex B.

2 OVERVIEW

2.1 CONCEPT OF COP-1

The Communications Operation Procedure-1 (COP-1) is a closed-loop procedure executed by the sending and receiving ends of the TC Space Data Link Protocol [3]. COP-1 utilizes an Automatic Request for Retransmission (ARQ) procedure of the 'go-back-n' type to retransmit Transfer Frames that were rejected by the receiving end of the protocol. COP-1 allows Type-A Transfer Frames to be accepted by the receiving end only if they are received in strict sequential order. This enables the service data units to be delivered correctly to the layer above at the receiving end, without omission or duplication, and in the same sequential order in which they were received from the layer above at the sending end.

COP-1 consists of a pair of synchronized procedures for each Virtual Channel: a Frame Operation Procedure-1 (FOP-1) that executes within the sending entity, and a Frame Acceptance and Reporting Mechanism-1 (FARM-1) that executes within the receiving entity. The FOP-1 transmits Transfer Frames of a particular Virtual Channel to the FARM-1 of the same Virtual Channel. The FARM-1 returns reports of the status of Transfer Frame acceptance to the FOP-1 using the Communications Link Control Words (CLCWs).

NOTE – This draft Recommendation states that COP-1 handles 'Transfer Frames'; however, these are actually partial Transfer Frames made up of Frame Data Units (FDUs) plus some parameters in the Transfer Frame Primary Header generated by COP-1. The Transfer Frame will be generated by the Frame Generation Procedure, as defined in [3]. The Frame Data Unit consists of the data to be inserted in the Transfer Frame Data Field.

Within COP-1, control of sequentiality is maintained using the Frame Sequence Number, which must be present in each Type-A Transfer Frame. Type-A Transfer Frames are transmitted by the FOP-1 with their Frame Sequence Numbers arranged in strict up-counting order. The FARM-1 permits Type-A Transfer Frames to be accepted only if they are received bearing Frame Sequence Numbers in the proper up-counting sequential order. Upon detection of the first sequence error, the FARM-1 will reject all subsequent Type-A Transfer Frames on that Virtual Channel which do not contain the expected Frame Sequence Number. FOP-1 initiates retransmission either in response to a 'Retransmit' Flag in the CLCW or by detecting a timeout. FOP-1 performs retransmission by re-sending all unacknowledged Type-A Transfer Frames on that Virtual Channel. FOP-1 and FARM-1 also have a window mechanism to prevent a new Transfer Frame with the same Frame Sequence Number as that of a missing Transfer Frame from being transmitted or accepted.

Valid Type-B Transfer Frames will always be accepted by FARM-1, and processed only to the extent of incrementing a counter for Type-B Transfer Frames in the CLCW. Type-B Transfer Frames are also used to send Control Commands from the FOP-1 to the FARM-1.

Both Type-A and Type-B Transfer Frames are protected by the error correction/detection capability of the underlying Channel Coding Sublayer and also must pass the Frame Validation Check defined in [3]. Therefore, Type-B Transfer Frames accepted by FARM-1

have a very high probability of being error-free. However, their sequentiality is not controlled by COP-1.

2.2 SERVICE TYPES

NOTE – The TC Space Data Link Protocol provides two service types (Sequence-Controlled and Expedited) that determine how reliably service data units supplied by the sending user are delivered to the receiving user. COP-1 provides two services (Sequence-Controlled Service and Expedited Service) to support these service types, as described in subsections 2.2.1 and 2.2.2.

2.2.1 SEQUENCE-CONTROLLED SERVICE (AD SERVICE)

The Sequence-Controlled Service (AD Service) is realized by an automatic ARQ procedure of the 'go-back-n' type, with sequence-control mechanisms of both sending and receiving ends and a standard report returned from the receiving end to the sending end.

For the AD Service, COP-1 ensures with a high probability of success that:

a) no FDU is lost;

b) no FDU is duplicated;

c) no FDU is delivered out of sequence.

Two types of Transfer Frames are used for providing the AD Service:

a) Type-AD Transfer Frames, for carrying FDUs;

b) Type-BC Transfer Frames, for carrying Control Commands for configuring COP-1 ('Unlock' and 'Set V(R)').

The AD Service is initiated by means of four distinct 'Initiate AD Service' Directives. Two of these Directives result in the transmission of one of the two Control Commands (Type-BC Transfer Frames). Each of the two Control Commands causes a well-defined action in FARM-1, which is then reflected in the CLCW. A timer is used to cause retransmission of the Control Command if the expected response is not received, with a limit on the number of automatic retransmissions allowed before it is declared that there is a problem in initiating the AD Service. The other two Directives allow the AD Service to be started without waiting for an action by the receiving end (although one requires receiving a good CLCW).

Once COP-1 for a particular Virtual Channel has been initialized for AD Service, FDUs are inserted into Transfer Frames and transmitted on that Virtual Channel in the order in which they are presented to COP-1.

The AD Service guarantees in-order delivery of FDUs on a single Virtual Channel. Because of the possibility of retransmission on only a single Virtual Channel, there is no guarantee

that FDUs on separate Virtual Channels, each using the AD Service, will be delivered in the order initially transmitted.

For the Type-AD Transfer Frames, the automatic retransmission procedure makes use of several variables, the most notable being the Receiver_Frame_Sequence_Number, V(R); the Transmitter_Frame_Sequence_Number, V(S); the Next Expected Frame Sequence Number contained in the CLCW, N(R); and the Frame Sequence Number in the Transfer Frame Primary Header, N(S) (see figure 2-1). These variables are explained in more detail in subsections 5.1 and 6.1.

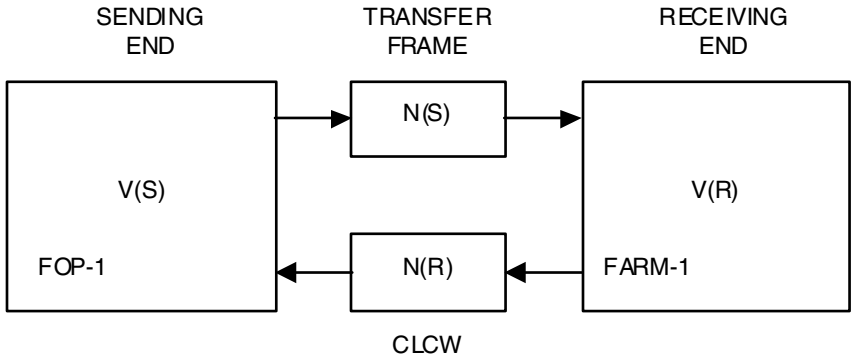

Figure 2-1: COP-1 Variables, Frame and Report Values

For transferring Type-AD Transfer Frames, if required, a flow control mechanism ('Wait' mechanism) is provided that permits the receiving end to signal that it does not have enough resources to cope with incoming data.

For Type-BC Transfer Frames, COP-1 makes use of a very small number of variables, the most notable being the 'Lockout' Flag in the CLCW for the 'Unlock' Control Command, and the value 'N(R)' in the CLCW for the 'Set V(R)' Control Command.

2.2.2 EXPEDITED SERVICE (BD SERVICE)

The Expedited Service (BD Service) is normally used either in exceptional operational circumstances, typically during spacecraft recovery operations, or when a higher layer protocol provides a retransmission capability.

Type-BD Transfer Frames are used for carrying FDUs of the BD Service. Type-BD Transfer Frames are transmitted only once (i.e., no retransmission). There is no guarantee that all Type-B FDUs are delivered.

In the FOP-1 at the sending end, Type-BD Transfer Frames are given immediate access in so far as is permitted by delays in the lower layers and procedures by other traffic on the communications link. At the receiving end, the FDUs carried by Type-BD Transfer Frames will be passed to the next procedure immediately.

NOTES

1 Some implementations of FARM-1 may use the same buffer to deliver FDUs carried by either Type-AD or Type-BD Transfer Frames in order to provide increased reliability through reduced complexity and lower resource consumption. In this case, when a Type-BD Transfer Frame is received, an FDU in the process of being delivered or 'waiting' to be delivered will be erased, without any indication to the sending end in the CLCW. For this implementation, the sending end should terminate any ongoing AD Service before starting a BD Service on the same Virtual Channel.

2 Although the BD mode of transmission carries the name 'Expedited', BD mode is neither a required method nor a faster method for inserting a Transfer Frame for immediate delivery into a stream of Transfer Frames. If the link currently supports a reliable AD service, then AD mode is recommended in such cases. Regardless of whether AD or BD mode is used, the inserted Transfer Frame must not use the same MAP address as an unfinished, multi-segment packet delivery process (a possible exception would be delivering a control command to the Packet Assembly Process).

2.3 HOW TO READ THIS DOCUMENT

COP-1 is one of the procedures performed by the protocol entity of the TC Space Data Link Protocol [3]. Section 3 of this document defines the interfaces between COP-1 and other procedures of the protocol entity that are used to define COP-1 in the succeeding sections of this document.

COP-1 processes requests submitted by the users of the protocol with request primitives and generates information to be given to the users with notification primitives (these interactions with the users are performed indirectly through the Higher Procedures as explained in 3.2.2 and 3.3.2). Section 4 of this document defines details of the request and notification primitives and complements the service definition of reference [3].

Each end of COP-1 (FOP-1 or FARM-1) is defined as a state machine. A state machine is an abstract model of a machine that is in a state at a particular instance and transitions to a new state performing certain actions when an event occurs. Sections 5 and 6 define the state machine of FOP-1 and FARM-1, respectively. In each of these sections, internal variables used by the state machine, actions performed by the state machine, and the state table of the state machine are defined in this order.

Finally, the parameters used for managing COP-1 are specified in section 7.

3 INTER-PROCEDURE INTERFACES

3.1 DEFINITIONS

COP-1 is one of the procedures performed by the protocol entity of the TC Space Data Link Protocol [3]. In order to define the operations of COP-1 completely and clearly, it is necessary to define some of the characteristics of the interfaces between COP-1 and other procedures of the protocol entity. This subsection defines the interfaces between COP-1 and other procedures of the protocol entity that are used to define COP-1 in the succeeding sections of this document.

The inter-procedure interfaces are defined only for the purpose of specifying the operations of COP-1 completely and clearly, and are not intended to imply any implementation technology or hardware/software configuration in a real system.

The inter-procedure interfaces are specified in the form of inter-procedure signals, which present an abstract model of the logical exchange of data and control information between procedures. The parameters of the primitives are specified in an abstract sense and specify the information to be made available to the procedure that uses the signal. The way in which a specific implementation makes this information available is not constrained by this specification. In addition to the parameters specified here, an implementation may provide other parameters (e.g., parameters for controlling activities, monitoring performance, facilitating diagnosis, and so on).

3.2 INTER-PROCEDURE INTERFACES AT THE SENDING END

3.2.1 INTERNAL ORGANIZATION OF PROTOCOL ENTITY

NOTE – Figure 3-1 shows the internal organization of the TC Space Data Link Protocol entity at the sending end, together with the interfaces with the other protocols used with the TC Space Data Link Protocol. The set of procedures performed above FOP-1 is collectively called the Higher Procedures, and the set of procedures performed below FOP-1 is collectively called the Lower Procedures.

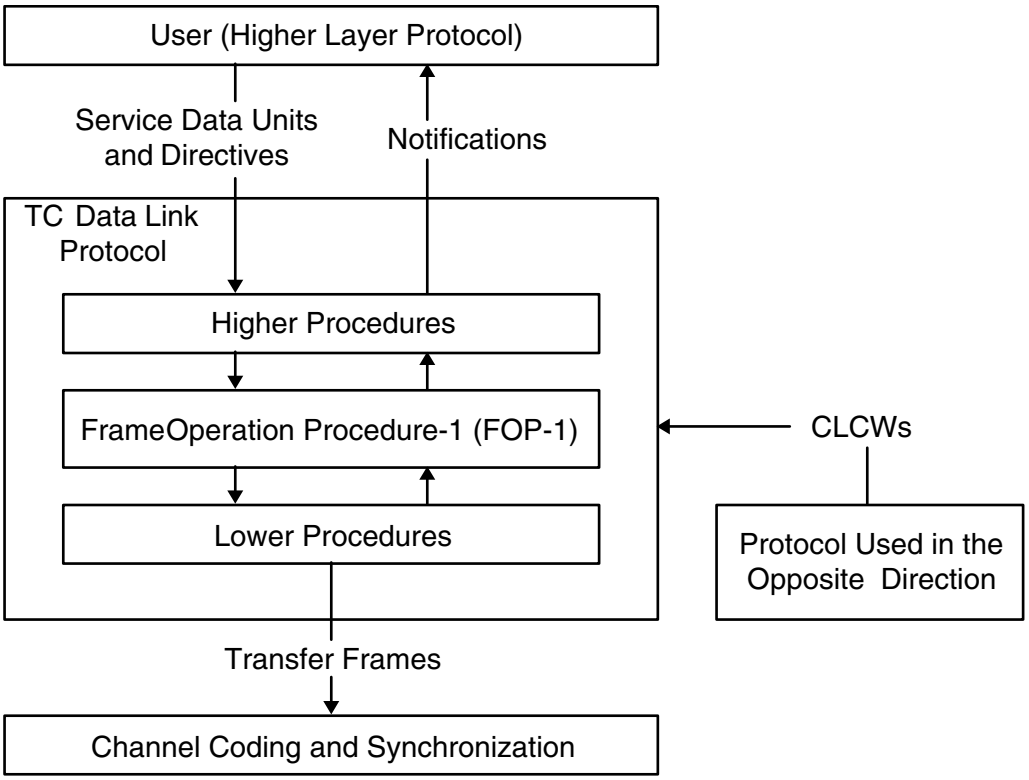

Figure 3-1: Internal Organization of Protocol Entity (Sending End)

3.2.1.1 The users of the TC Space Data Link Protocol shall interact with the protocol entity through Service Access Points (SAPs) using service primitives defined in reference [3]. The users shall request the protocol entity to transfer service data units, and shall receive from the protocol entity notifications associated with the transfer of service data units. The users may also request the protocol entity to perform Directives defined in section 4.

3.2.1.2 The Higher Procedures shall perform blocking and/or segmentation if necessary, and shall deliver Frame Data Units (FDUs) to the entities of FOP-1 (there is an entity of FOP-1 for each Virtual Channel). FOP-1 shall: generate some parameters of the Transfer Frame Primary Header; control transmission and retransmission of FDUs by examining the CLCWs received from the receiving end; and deliver FDUs with the generated parameters to the Lower Procedures. FOP-1 shall receive CLCWs using a protocol used in the opposite direction. The Lower Procedures shall generate Transfer Frames from the data received from FOP-1, multiplex Transfer Frames, and deliver Transfer Frames to the underlying entity of Channel Coding and Synchronization.

3.2.2 FOP-1 INTERFACE TO HIGHER PROCEDURES

3.2.2.1 Inter-procedure Signals

FOP-1 shall interact with the Higher Procedures using inter-procedure signals. These inter-procedure signals are related to service primitives exchanged between users of the protocol and the protocol entity, and it is assumed in this draft Recommendation that the Higher

Procedures shall perform necessary conversion between service primitives defined in [3] and inter-procedure signals defined here.

The inter-procedure signals exchanged between FOP-1 and the Higher Procedures are classified into two categories:

a) management signals;

b) FDU transfer signals.

3.2.2.2 Management Signals

3.2.2.2.1 General

The management signals shall be used to manage the operation of FOP-1 of a Virtual Channel. The management signals exchanged between FOP-1 and the Higher Procedures are classified into three categories:

a) directive requests;

b) directive notifications;

c) asynchronous notifications.

3.2.2.2.2 Directive Requests

The directive request signal shall be issued by the Higher Procedures to request FOP-1 to perform a Directive. Each directive request signal corresponds to a DIRECTIVE.request primitive defined in reference [3]. A DIRECTIVE.request primitive issued by the user shall be translated by the Higher Procedures to a directive request signal, which shall then delivered to FOP-1.

The directive request signal shall have the following format (the items in parentheses are parameters of the signal):

Directive Request (Request Identifier, GVCID, Directive Type, Directive Qualifier).

The Request Identifier shall be used in the subsequent notification signal to identify the request associated with it. For Directive Type and Directive Qualifier, see 4.1.

3.2.2.2.3 Directive Notifications

The directive notification signal shall be issued by FOP-1 to notify the Higher Procedures of an event or an action associated with a Directive. Each directive notification signal corresponds to a DIRECTIVE_Notify.indication primitive defined in reference [3]. A directive notification signal issued by FOP-1 shall be translated by the Higher Procedures to a DIRECTIVE_Notify.indication primitive, which shall then be given to the user.

The directive notification signal shall have the following format (the items in parentheses are parameters of the signal):

Directive Notification (Request Identifier, GVCID, Notification Type).

For Notification Type, see 4.2.

3.2.2.2.4 Asynchronous Notifications

The asynchronous notification signal shall be issued by FOP-1 to notify the Higher Procedures of an event that occurs asynchronously with requests. Each asynchronous notification signal shall correspond to an Async_Notify.indication primitive defined in reference [3]. An asynchronous notification signal issued by FOP-1 shall be translated by the Higher Procedures to an Async_Notify.indication primitive, which shall then be given to the user.

The asynchronous notification signal shall have the following format (the items in parentheses are parameters of the signal):

Asynchronous Notification (GVCID, Notification Type, Notification Qualifier).

For Notification Type and Notification Qualifier, see 4.3.

3.2.2.3 FDU Transfer Signals

3.2.2.3.1 General

The FDU transfer signals shall be used to transfer FDUs on a Virtual Channel. The FDU transfer signals exchanged between FOP-1 and the Higher Procedures are classified into two categories:

a) Request to Transfer FDU;

b) transfer notifications.

3.2.2.3.2 Request to Transfer FDU

The ‘Request to Transfer FDU’ signal shall be issued by the Higher Procedures to request FOP-1 to transfer an FDU. When a service primitive is issued by the user to request transfer of a service data unit, the Higher Procedures shall perform necessary operations to generate one or more FDUs, which may include blocking or segmentation, and shall generate a ‘Request to Transfer FDU’ signal to request transfer of each FDU.

NOTE – The 'Request to Transfer FDU' signal is issued by the Higher Procedures for an FDU, while the service request primitive is issued by the service user for a service data unit. One service request primitive may not result in one 'Request to Transfer FDU' signal because blocking or segmentation may be performed by the Higher Procedures (see reference [3]).

The 'Request to Transfer FDU' signal shall have the following format (the items in parentheses are parameters of the signal):

Request to Transfer FDU (Request Identifier, GVCID, FDU, Service Type).

The Request Identifier shall be used in the subsequent notification signal to identify the request associated with it.

3.2.2.3.3 Transfer Notifications

The transfer notification signal shall be issued by FOP-1 to notify the Higher Procedures of an event associated with the transfer of an FDU. The transfer notification signals shall be processed by the Higher Procedures to generate a service indication primitive to notify the user of an event associated with the transfer of a service data unit.

NOTE – The transfer notification signal is issued by FOP-1 for an FDU, while the service indication primitive is issued by the Higher Procedures for a service data unit. One transfer notification signal may not result in one service indication primitive, because segmentation or blocking may have been performed by the Higher Procedures (see reference [3]).

The transfer notification signal shall have the following format (the items in parentheses are parameters of the signal):

Transfer Notification (Request Identifier, GVCID, Notification Type).

For Notification Type, see 4.4.

3.2.3 FOP-1 INTERFACE TO LOWER PROCEDURES

The following signals shall be delivered by FOP-1 to the Lower Procedures (the items in parentheses are parameters of the signal):

a) Transmit Request for Frame (GVCID, Bypass Flag, Control Command Flag, Frame Sequence Number, Transfer Frame Data Field);

b) Abort Request (GVCID).

The 'Transmit Request for Frame' signal shall be used to request the Lower Procedures to transmit a Transfer Frame. The parameters of this signal are elements of a Transfer Frame (for details, see reference [3]).

The 'Abort Request' signal shall be used to cancel any ongoing processes for Type-AD and BC Transfer Frames of the Virtual Channel (identified by the GVCID parameter) that are being performed in the Lower Procedures.

NOTE – The 'Abort Request' signal is used to facilitate efficient retransmission of Type-AD or BC Transfer Frames, and may (optionally) also cancel ongoing processes for Type-AD and BC Transfer Frames in the Channel Coding and Synchronization entity.

The following signal shall be issued by the Lower Procedures to FOP-1 (the items in parentheses are parameters of the signal):

Response (Response Type);

The 'Response' signal shall be used for the purpose of flow control between FOP-1 and the Lower Procedures, and shall be issued by the Lower Procedures for every Transfer Frame given by FOP-1 when the Transfer Frames have been accepted or rejected.

The values of the parameter 'Response Type' are:

a) AD_Accept (when a Type-AD Transfer Frame is accepted);

b) AD_Reject (when a Type-AD Transfer Frame is rejected);

c) BC_Accept (when a Type-BC Transfer Frame is accepted);

d) BC_Reject (when a Type-BC Transfer Frame is rejected);

e) BD_Accept (when a Type-BD Transfer Frame is accepted);

f) BD_Reject (when a Type-BD Transfer Frame is rejected).

3.3 INTER-PROCEDURE INTERFACES AT THE RECEIVING END

3.3.1 INTERNAL ORGANIZATION OF PROTOCOL ENTITY

NOTE – Figure 3-2 shows the internal organization of the TC Space Data Link Protocol entity at the receiving end, together with the interfaces with the other protocols used with the TC Space Data Link Protocol. In figure 3-2, the set of procedures performed below FARM-1 is collectively called the Lower Procedures, and the set of procedures performed above FARM-1 is collectively called the Higher Procedures.

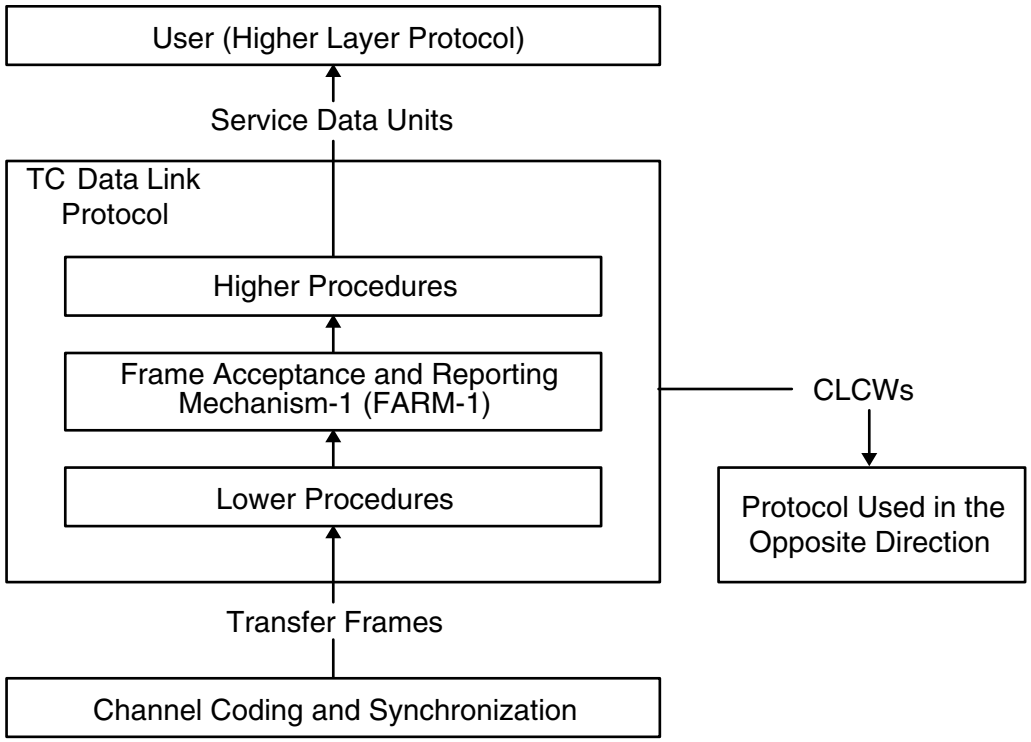

Figure 3-2: Internal Organization of Protocol Entity (Receiving End)

The Lower Procedures shall perform the Frame Validation Check against Transfer Frames received from the underlying entity of Channel Coding and Synchronization, demultiplex Transfer Frames, and deliver the Transfer Frames to the entities of FARM-1 (there is an entity of FARM-1 for each Virtual Channel). FARM-1 shall examine incoming Transfer Frames, perform Frame Acceptance Checks against Type-A Transfer Frames, execute Control Commands, generate some information to be transferred back to FOP-1 in CLCWs, and deliver FDUs extracted from Transfer Frames to the Higher Procedures. The Higher Procedures shall reconstruct service data units from FDUs and deliver the service data units to users of the protocol.

The users of the TC Space Data Link Protocol shall receive service data units from the protocol entity through SAPs using service primitives defined in reference [3].

3.3.2 FARM-1 INTERFACE TO HIGHER PROCEDURES

FARM-1 shall interact with the Higher Procedures using inter-procedure signals. These inter-procedure signals are related to service primitives exchanged between users of the protocol and the protocol entity, and it is assumed in this draft Recommendation that the Higher Procedures shall perform the necessary conversion between service primitives defined in [3] and inter-procedure signals defined here.

When a Type-AD Transfer Frame is accepted by FARM-1, the FDU contained in the Transfer Frame shall be placed in a buffer for delivery to the Higher Procedures only when

there is a buffer available. If there is no buffer available, the newly arrived Type-AD Transfer Frame shall be discarded.

When a Type-BD Transfer Frame is accepted by FARM-1, the FDU contained in the Transfer Frame shall be placed in a buffer for delivery to the Higher Procedures even if there is no buffer available, in which case the data in the buffer will be erased and an optional 'Aborted Indication' signal may be sent to the Higher Procedures.

When a new FDU is accepted, FARM-1 shall send the following signal to the Higher Procedures to indicate the arrival of the new FDU:

FDU Arrived Indication (GVCID).

The 'FDU Arrived Indication' signal is processed by the Higher Procedures to generate an appropriate service indication primitive to deliver a service data unit to the service user.

NOTES

1 The service indication primitive is issued by the Higher Procedures for a service data unit, while the 'FDU Arrived Indication' signal is issued by FARM-1 for an FDU. One 'FDU Arrived Indication' signal may not result in one service indication primitive because segmentation or blocking may have been performed by the Higher Procedures at the sending end (see reference [3]).

2 In addition to the 'FDU Arrived Indication', FARM-1 may optionally send a signal called 'Aborted Indication' to the Higher Procedures when data that were previously contained in a buffer have been erased in favor of the newly received FDU. This draft Recommendation does not specify how this signal is delivered.

Although an implementation may provide a scheme for flow control between FARM-1 and the Higher Procedures, this draft Recommendation does not define a specific signal for flow control. However, if the flow control scheme ever results in the COP-1 Wait_Flag being set, the scheme must also provide a 'Buffer Release Signal'. In this case, FARM-1 shall be signaled when sufficient buffer space becomes available for at least one more maximum-size Frame.

3.3.3 FARM-1 INTERFACE TO LOWER PROCEDURES

The Lower Procedures shall deliver a received Transfer Frame to FARM-1 by placing it in a buffer. When a valid Transfer Frame is placed in the buffer, the Lower Procedures shall send the following signal to FARM-1 to indicate the arrival of the new Transfer Frame (the item in parentheses is a parameter of the signal):

Valid Frame Arrived Indication (GVCID).

4 DETAILED SERVICE DEFINITION

NOTE – This section defines parameters used in some of the service primitives defined in reference [3], and complements the service definition of reference [3]. These parameters are also used in inter-procedure signals defined in section 3 of this document.

4.1 DIRECTIVE REQUEST

To control the operations of COP-1, the authorized user at the sending end can invoke a Directive by passing the DIRECTIVE.request primitive to the protocol entity (see reference [3]). The type of Directive shall be indicated by the parameter Directive Type of the DIRECTIVE.request primitive. If the Directive has a parameter, it shall be carried by the parameter Directive Qualifier.

A DIRECTIVE.request primitive issued by the user shall be translated by the Higher Procedures to a directive request signal (see 3.2.2.2.2), which is then delivered to FOP-1. The Directive Types of the DIRECTIVE.request primitive defined here shall also be used as the Directive Types of the directive request signal given to FOP-1.

In this subsection, the Directive Types used by COP-1 are defined. The Directive Types are classified into four categories:

a) four 'Initiate AD Service' Directives;

b) one 'Terminate AD Service' Directive;

c) one 'Resume AD Service' Directive;

d) five 'FOP-1 Setup' Directives.

Any other Directive will be rejected and reported as an invalid Directive.

Table 4-1 shows the Directive Types and Directive Qualifiers defined for COP-1. For other parameters used by the DIRECTIVE.request primitive, see reference [3].

These twelve Directives correspond to Events E23 through E40 in the FOP-1 State Table (table 5-1).

NOTES

1 The FOP-1 Directives include the 'Terminate AD Service' Directive. In the 'Initial' State (S6) this Directive is not effective in the case that the Suspend_State (SS) is not equal to zero. When SS is not equal to zero, it means that the FOP-1 AD Service has been suspended. In this case, the Directive is Accepted and Confirmed but the AD Service remains suspended (i.e., Suspend_State remains different from zero, the queues are not purged, etc.). To terminate a suspended AD Service, the service may first be resumed with a 'Resume AD Service' Directive (and then a subsequent

'Terminate AD Service' Directive will really be effective), or initiated with one of the 'Initiate AD Service' Directives performing the 'Initialize' action.

2 The FOP-1 Directives include the 'Set V(S) to V*(S)' Directive to set the Transmitter_Frame_Sequence_Number (V(S)). The Directive can be used to set V(S) in FOP-1 to match the value of the Receiver_Frame_Sequence_Number (V(R)) in FARM-1. Typically this is necessary when contact is newly established between the sending end and receiving end following a break. The Directive may be used to set V(S) in FOP-1 before initiating the AD Service. The correct value must be chosen for the V*(S) parameter to the Directive. In this case, the correct value is the value of V(R), as reported by N(R) contained in the CLCWs.

3 The FOP-1 Directives include the 'Set V(S) to V*(S)' Directive to set the Transmitter_Frame_Sequence_Number (V(S)). This Directive is only accepted when FOP-1 is in the 'Initial' State (S6). Use of the Directive should be limited to the case that the Suspend_State (SS) is equal to zero. When SS is not equal to zero, it means that the FOP-1 AD Service has been suspended. If the value of V(S) is changed while FOP-1 is suspended, FOP-1 may be unable to execute the COP-1 procedure correctly.

4 Some of the FOP-1 Setup Directives are permitted while the FOP-1 AD Service is active. However, they should be used with caution in these circumstances. Changes are not limited to subsequent segments, but will affect segments that are currently in the Sent_Queue.

Table 4-1: Directive Types

Directive Type	Directive Qualifier
Initiate AD Service (without CLCW check)	None
Initiate AD Service (with CLCW check)	None
Initiate AD Service (with Unlock)	None
Initiate AD Service (with Set V(R))	V (R) (New value for V(R))
Terminate AD Service	None
Resume AD Service	None
Set V(S) to V*(S)	V*(S) (New value for V(S))
Set FOP_Sliding_Window_Width	New value for width of FOP Sliding Window (K)
Set T1_Initial	New value for Timer_Initial_Value (T1_Initial)
Set Transmission_Limit	New value for Transmission_Limit
Set Timeout_Type	New value for Timeout_Type (TT)

4.2 DIRECTIVE NOTIFICATION

The protocol entity shall notify the user at the sending end of an event or an action associated with a Directive by passing the DIRECTIVE_Notify.indication primitive (see reference [3]). The type of notification shall be indicated by the parameter Notification Type of the DIRECTIVE_Notify.indication primitive.

A DIRECTIVE_Notify.indication primitive delivered to the user is translated from a directive notification signal generated by FOP-1 (see 3.2.2.2.3). The Notification Types of the DIRECTIVE_Notify.indication primitive defined here shall also be used as the Notification Types of the directive notification signal generated by FOP-1.

Table 4-2 shows the Notification Types of the DIRECTIVE_Notify.indication primitive defined for COP-1. For other parameters used by the DIRECTIVE_Notify.indication primitive, see reference [3].

Table 4-2: Notification Types for DIRECTIVE_Notify.indication

Notification Type
Accept Response to Directive
Reject Response to Directive
Positive Confirm Response to Directive
Negative Confirm Response to Directive

Asynchronously from a Directive requested by the user, FOP-1 shall return either an 'Accept Response to Directive' notification or a 'Reject Response to Directive' notification. This indicates whether or not FOP-1 will try to execute the Directive. If a 'Reject Response to Directive' notification is returned, then no other notifications will be returned for the requested Directive.

After each 'Accept Response to Directive' notification, but asynchronously from that notification, FOP-1 shall return either a 'Positive Confirm Response to Directive' notification or a 'Negative Confirm Response to Directive' notification, referring to the Directive. This indicates whether or not COP-1 (including FARM-1 for Directives requiring receiving-end action) was able to complete the execution of the Directive.

NOTE – The 'Negative Confirm Response to Directive' notification does not carry a parameter giving the reason for the failure to confirm performance of the service requested by the Directive. However, whenever a condition is detected which might give rise to a 'Negative Confirm Response to Directive' notification, an 'Alert' notification is signaled by FOP-1.

4.3 ASYNCHRONOUS NOTIFICATION

4.3.1 GENERAL

The protocol entity shall notify the user at the sending end of an event that occurs asynchronously with requests by passing the Async_Notify.indication primitive (see reference [3]). The type of notification shall be indicated by the parameter Notification Type of the Async_Notify.indication primitive. If the notification has a parameter, it shall be carried by the parameter Notification Qualifier.

An Async_Notify.indication primitive delivered to the user shall be translated from an asynchronous notification signal generated by FOP-1 (see 3.2.2.2.4). The Notification Types of the Async_Notify.indication primitive defined here are also used as the Notification Types of the asynchronous notification signal generated by FOP-1.

Table 4-3 shows the Notification Types and Notification Qualifiers of the Async_Notify.indication primitive defined for COP-1. For other parameters used by the Async_Notify.indication primitive, see reference [3].

Table 4-3: Notification Types for Async_Notify.indication

Notification Type	Notification Qualifier
Alert	Reason Code
Suspend	None

4.3.2 ALERT

If an unrecoverable condition is detected on the link, then the FOP-1 shall generate an 'Alert' notification. The 'Alert' notification shall serve as notice of the termination of the Sequence-Controlled Service guarantee.

NOTE – When the 'Alert' notification is issued by FOP-1, recovery actions by a higher layer protocol may be necessary to ensure that data are not lost, duplicated or erroneous. However, there is no guarantee that a higher layer protocol can always perform recovery actions successfully.

Table 4-4 lists the reasons for the 'Alert' notification. The Reason Code is carried by the parameter Notification Qualifier of the Async_Notify.indication primitive.

NOTE – In addition to the Reason Code, an implementation may choose to include parameters giving the FOP Event number that caused the 'Alert' and the FOP State at the time of the Event. The additional information may assist the higher layers.

Table 4-4: Reasons for the "Alert" Notification

Reason	Reason Code
Allowed number of transmissions exhausted for a Type-AD Transfer Frame. • In case a CLCW arrives which negatively acknowledges a frame when Transmission_Limit is set to 1, FOP-1 generates an 'Alert[limit]'. • In case the Timer expires and the value of the Transmission_Count has reached the value of the Transmission_Limit, FOP-1 generates an 'Alert[T1]'. (Note: This 'Alert' Indication cannot occur if the Timeout_Type variable is set to '1'.)	Limit or T1
Allowed number of transmissions exhausted for a Type-BC Transfer Frame derived from a Directive (e.g., 'Initiate AD Service' Directive with 'Unlock' or with 'Set V(R)').	T1
Lockout detected.	Lockout
CLCW with 'Retransmit' Flag = 0 and N(R) = NN(R) has arrived, when last CLCW showed 'Retransmit' Flag = 1.	Synch
All Transfer Frames sent are acknowledged but 'Retransmit' Flag = 1.	Synch
An attempt to acknowledge Transfer Frames is made during the initializing phase corresponding to State (S4).	Synch
CLCW with invalid N(R) has arrived.	NN(R)
CLCW with 'Wait' Flag = 1 and 'Retransmit' Flag = 0 has arrived.	CLCW
CLCW with invalid pattern of bits has arrived.	CLCW
FOP-1 and Lower Procedures are out of synchronization (Lower Procedures rejects Transfer Frame even though appropriate 'Out' Flag is set to 'Ready').	LLIF (Lower Layer Interface)

A 'Terminate AD Service' Directive has arrived	Term

The 'Alert' notifications relating to the transmission count may occur as a result of a break in the underlying Physical Layer and may therefore be caused by problems outside the Data Link Layer.

All other 'Alert' notifications report the breakdown of the Data Link Layer protocol. This means that some part of the system is not operating to specification (therefore, reports already received by the procedures above FOP-1 are likely to have been incorrect).

In particular, an 'Alert' notification shall be issued by FOP-1 of the Virtual Channel in which the error condition was detected; but, given that the protocol mechanism has broken down, it is possible that the Virtual Channel Identifier in the received data is incorrect. Therefore, a single failure may cause the same or different 'Alert' notifications on more than one Virtual Channel.

In general, once an 'Alert' occurs, no further 'Alert' can occur until after the FOP-1 receives one of the Directives to initiate the AD Service. The exception to this is the 'Alert' LLIF, which can occur at any time.

4.3.3 SUSPEND

By setting Timeout_Type to '1' and setting a small value of T1_Initial, it is possible to cause FOP-1 to transmit a sequence of Type-AD Transfer Frames a specified number of times and then suspend its operation, without clearing its buffers. The 'Suspend' notification shall be used to notify that the transmissions have been completed and that the operation has been suspended. A subsequent 'Resume' Directive shall then cause FOP-1 to resume operation in the same state it was in when it was suspended.

4.4 TRANSFER NOTIFICATION

4.4.1 GENERAL

The protocol entity shall notify the user at the sending end of an event associated with the transfer of a service data unit by passing the service indication primitive in the form of XXX_Notify.indication, where XXX is a service name (see reference [3]). The type of notification shall be indicated by the parameter Notification Type of the XXX_Notify.indication primitive.

Table 4-5 shows the Notification Types of the XXX_Notify.indication primitive defined for COP-1. For other parameters used by the XXX_Notify.indication primitive, see reference [3]. Some Notification Types shall be issued for service data units of both Type-A and Type-B Services, while some Notification Types shall be issued only for service data units of Type-A Service.

Table 4-5: Notification Types for XXX_Notify.indication

Notification Type	Service Types
Accept Response to Request to Transfer	Type-A and Type-B
Reject Response to Request to Transfer	Type-A and Type-B
Positive Confirm Response to Request to Transfer	Type-A
Negative Confirm Response to Request to Transfer	Type-A

Table 4-6 shows the Notification Types of the transfer notification signal defined for COP-1. Each Notification Type defined in table 4-6 shall correspond to a Notification Type defined in table 4-5. Some notification types shall be issued for FDUs of both AD and BD Services, while some notification types shall be issued only for FDUs of AD Service.

A XXX_Notify.indication primitive delivered to the user of the protocol is translated from a transfer notification signal generated by FOP-1 (see 3.2.2.3.3).

NOTE – The XXX_Notify.indication primitive is issued by the Higher Procedures for a service data unit, while the transfer notification signal is issued by FOP-1 for an FDU. One transfer notification signal may not result in one XXX_Notify.indication primitive because segmentation or blocking may have been performed by the Higher Procedures.

Table 4-6: Notification Types for Transfer Notification Signal

Notification Type	Service Types
Accept Response to Request to Transfer FDU	AD and BD Services
Reject Response to Request to Transfer FDU	AD and BD Services
Positive Confirm Response to Request to Transfer FDU	AD Service
Negative Confirm Response to Request to Transfer FDU	AD Service

4.4.2 TRANSFER NOTIFICATIONS FOR TYPE-A (OR AD) SERVICE

After each 'Request to Transfer FDU' from the Higher Procedures (see 3.2.2.3.2), either immediately or after a delay, FOP-1 shall return to the Higher Procedures either an 'Accept Response to Request to Transfer FDU' or a 'Reject Response to Request to Transfer FDU' referring to the Request. With this transfer notification signal, FOP-1 signals its acceptance or rejection of the Request. If a 'Reject Response to Request to Transfer FDU' is returned, then no other transfer notification signals shall be returned for the Request.

However, if FOP-1 is unable to transmit the FDU immediately (for example, because the receiving end has indicated it cannot immediately accept any more data), then FOP-1 will delay signaling to the Higher Procedures its acceptance of the FDU, even though it places the FDU in its Wait_Queue. The Higher Procedures may not issue another 'Request to Transfer FDU' until the current one has been accepted or rejected.

Whenever FOP-1 has transfer capacity after a period when no extra capacity was available, it checks to see if an FDU is in the Wait_Queue. If so, FOP-1 accepts the FDU, which is then deemed to be under control of FOP-1, and returns an 'Accept Response to Request to Transfer FDU'.

After each 'Accept Response to Request to Transfer FDU', but asynchronously from the Response, FOP-1 shall signal to the Higher Procedures either a 'Positive Confirm Response to Request to Transfer FDU' or a 'Negative Confirm Response to Request to Transfer FDU' referring to the Request.

Because there may be a number of FDUs which have been accepted, but not confirmed, the Higher Procedures and FOP-1 need to share a common system of request identifiers for use when referring to a particular Request (and, therefore, to a particular FDU).

The 'Positive Confirm Response to Request to Transfer FDU' shall notify the Higher Procedures that the FDU was received by the receiving end and acknowledged by a CLCW. If COP-1 is unable to guarantee that an FDU was transferred to the receiving end despite retry attempts, a 'Negative Confirm Response to Request to Transfer FDU' for that FDU shall be passed to the Higher Procedures. FDUs for which a 'Negative Confirm Response' is received may or may not have been successfully transferred. Therefore, a 'Negative Confirm Response' shall signal a break in the Sequence-Controlled Service guarantee.

The 'Negative Confirm Response to Request to Transfer FDU' does not carry a parameter giving the reason for the failure to confirm the requested data transfer service. However, whenever a condition is detected which might give rise to such responses, an 'Alert' notification shall be signaled from FOP-1.

From the point of view of the Higher Procedures, between the time of acceptance of an FDU by FOP-1 until a 'Positive Confirm Response' is received, the FDU is in a 'gray area' in which it is not possible to know if it has been transferred to the receiving end. If an FDU has not been accepted by FOP-1, it is deemed to be still under the control of the Higher Procedures and is not covered by the Sequence-Controlled Service guarantee. Once FOP-1

detects a problem (for example, a failure of the automatic error-recovery mechanism to ensure transfer) leading to a break in the Sequence-Controlled Service guarantee, it shall reject the outstanding 'Request to Transfer FDU'. Therefore, an FDU which has not been accepted can never be in the 'gray area'.

Once either a 'Positive Confirm Response to Request to Transfer FDU' or a 'Negative Confirm Response to Request to Transfer FDU' is returned, no further action shall be taken by FOP-1 for the corresponding Request.

4.4.3 TRANSFER NOTIFICATIONS FOR TYPE-B (OR BD) SERVICE

After each 'Request to Transfer FDU' from the Higher Procedures (see 3.2.2.3.2), either immediately or after a delay, FOP-1 returns to the Higher Procedures either an 'Accept Response to Request to Transfer FDU' or a 'Reject Response to Request to Transfer FDU' referring to the Request. With this transfer notification signal, FOP-1 signals its acceptance or rejection of the Request.

As long as the sending-end Lower Procedures are capable of accepting the Type-BD Transfer Frame, it shall be accepted from the Higher Procedures and transmitted. If the Lower Procedures cannot accept the Type-BD Transfer Frame, it shall be rejected; there is no Wait_Queue for Type-BD Transfer Frames.

As no error recovery is performed by COP-1 for a Type-BD Transfer Frame, a copy of the data is not kept by FOP-1 and no confirmation of acceptance of the Transfer Frame by the receiving end is signaled.

Once an 'Accept Response to Request to Transfer FDU' or a 'Reject Response to Request to Transfer FDU' is returned, no further action is taken by FOP-1 for the corresponding Request.

5 FOP-1

5.1 FOP-1 VARIABLES

5.1.1 GENERAL

This section describes the variables used by the FOP-1 state machine. The complete meaning of these variables can only be fully understood in conjunction with a careful reading of the FOP-1 State Tables contained in section 5.3. It is these tables and the associated actions defined in 5.2 which, ultimately, contain the master definition of FOP-1.

The variables defined in this section are part of the definition of FOP-1. Any implementation of FOP-1 is likely to have additional private, implementation-dependent variables.

FOP-1 maintains the following variables for each Virtual Channel:

a) State;

b) Transmitter_Frame_Sequence_Number (usually referred to as 'V(S)');

c) Wait_Queue;

d) Sent_Queue;

e) To_Be_Retransmitted_Flag;

f) AD_Out_Flag;

g) BD_Out_Flag;

h) BC_Out_Flag;

i) Expected_Acknowledgement_Frame_Sequence_Number (usually referred to as 'NN(R)');

j) Timer_Initial_Value (also known as 'T1_Initial');

k) Transmission_Limit ;

l) Transmission_Count ;

m) FOP_Sliding_Window_Width (also known as 'K');

n) Timeout_Type (TT);

o) Suspend_State (SS).

These variables are described in detail in the following subsections.

5.1.2 STATE

The state of FOP-1 may be one of the following:

a) Active (S1);

b) Retransmit without Wait (S2);

c) Retransmit with Wait (S3);

d) Initializing without BC Frame (S4);

e) Initializing with BC Frame (S5);

f) Initial (S6).

This variable represents the state of FOP-1 for the specific Virtual Channel. Each value of the State variable shall correspond to a column in the FOP-1 State Table (table 5-1).

'Active' State (S1) is the normal state of the state machine when there are no recent errors on the link and no incidents have occurred leading to flow control problems.

The state machine is in the 'Retransmit without Wait' State (S2) while the 'Retransmit' Flag is 'on' in the CLCW of the Virtual Channel but no other exceptional circumstances prevail.

The state machine is in the 'Retransmit with Wait' State (S3) while the 'Wait' Flag is 'on' in the CLCW of the Virtual Channel. (Some Transfer Frames must always be retransmitted when the 'Wait' Flag is reset, since the 'Wait' Flag is set only when at least one Transfer Frame has been discarded.) In this state the 'Retransmit' Flag will also be set (as a consequence of the fact that Transfer Frames have been lost).

The state machine is in the 'Initializing without BC Frame' State (S4) after receiving an 'Initiate AD Service (with CLCW check)' Directive while in the 'Initial' State. A successful CLCW check will result in a transition to S1.

The state machine is in the 'Initializing with BC Frame' State (S5) after receiving an 'Initiate AD Service (with Unlock)' Directive or 'Initiate AD Service (with Set V(R))' Directive while in the 'Initial' State with BC_Out_Flag = Ready. A successful transmission of the Type-BC Transfer Frame and a subsequent 'clean' CLCW status will result in a transition to S1.

The state machine is in the 'Initial' State (S6) whenever it is necessary to terminate an ongoing service (this happens when a 'Terminate AD Service' Directive is received or when an 'exception', i.e., an event that causes an 'Alert', occurs). In principle, the 'Initial' State is the first state entered by the state machine for a particular Virtual Channel. While in principle all of these Virtual Channels remain open during the life of the mission, provisions must be made for interruptions of the communications link between the sending and receiving ends and for the operation of multiple senders for the same receiving end. These considerations mean that it must be possible to start up a state machine at a sending end more

than once during the life of the mission. State S6 shall also be used when the AD Service is suspended.

In the 'Initial' State, FDUs may only be transmitted if they are Type-BD Transfer Frames. To start the Sequence-Controlled Service, it is necessary to execute one of the four possible 'Initiate AD Service' Directives. If the Directive is accepted and successfully executed, the state machine will be set to the 'Active' State (S1). If the Directive is not successfully executed (as would be the case if the transmission of an 'Unlock' BC Transfer Frame were not confirmed in the CLCW reports from the receiving end after the maximum allowed number of timer-initiated retransmissions), FOP-1 shall generate an 'Alert' notification and reenter the 'Initial' State.

5.1.3 TRANSMITTER_FRAME_SEQUENCE_NUMBER, V(S)

The Transmitter_Frame_Sequence_Number, V(S), contains the value of the Frame Sequence Number, N(S), to be put in the Transfer Frame Primary Header of the next Type-AD Transfer Frame to be transmitted.

5.1.4 WAIT_QUEUE

When Type-AD FDUs are received from the Higher Procedures, they shall be held in the Wait_Queue until they can be accepted by FOP-1. The Wait_Queue has a maximum capacity of one FDU.

The Wait_Queue and 'Accept Response to Request to Transfer FDU' form the primary mechanism by which flow control as seen by the Higher Procedures is governed. When an FDU is on the Wait_Queue, this means that the Higher Procedures have not yet received an 'Accept Response' for the corresponding 'Request to Transfer FDU'.

5.1.5 TO_BE_RETRANSMITTED_FLAG

If retransmissions of the Sent_Queue are to be performed because one or more Transfer Frames were not acknowledged within the time allowed, or were negatively acknowledged by a CLCW with the 'Retransmit Flag' set, it is not reasonable to shut out all other FOP-1 activity until the last Transfer Frame on the Sent_Queue has been accepted by the Lower Procedures (especially since the Lower Procedures use the 'Accept Response' as its flow control mechanism). During that possibly extended time other events may occur, such as the arrival of a CLCW, which must be processed. To handle this situation, each Transfer Frame on the Sent_Queue carries a To_Be_Retransmitted_Flag to distinguish a Transfer Frame that has been transmitted (or retransmitted) and is awaiting acknowledgement (Flag reset) from one that must be retransmitted (Flag set). Upon receipt of an 'Accept Response' from the Lower Procedures, these flags will be used to determine which Transfer Frame on the Sent_Queue, if any, to retransmit next.

5.1.6 AD_OUT_FLAG, BC_OUT_FLAG, AND BD_OUT_FLAG

FOP-1 records whether or not a 'Transmit Request for Frame' is outstanding for each of the three types of Transfer Frames: AD, BC and BD. There are therefore three variables:

a) AD_Out_Flag (for Type-AD Transfer Frames);

b) BC_Out_Flag (for Type-BC Transfer Frames);

c) BD_Out_Flag (for Type-BD Transfer Frames).

These variables may take one of two values:

a) Ready;

b) Not_Ready.

When FOP-1 issues a 'Transmit Request for Frame', it shall set the appropriate 'Out' variable to 'Not_Ready'. When the 'Transmit Request' is accepted by the Lower Procedures, FOP-1 shall set the variable to 'Ready'.

5.1.7 SENT_QUEUE

The Sent_Queue is a Virtual Channel data structure in which the master copy of all Type-AD and Type-BC Transfer Frames on a Virtual Channel is held between the time a copy of the Transfer Frame is first passed to the Lower Procedures for transmission, and the time the FOP-1 has finished processing the Transfer Frame.

FOP-1 has finished processing a Type-AD or Type-BC Transfer Frame when:

a) it receives (via the CLCW) a positive acknowledgement of receipt of the Transfer Frame (perhaps after retransmission); or

b) an event causes FOP-1 to purge the Sent_Queue (i.e., an exception or a 'Terminate AD Service' Directive).

Once the processing is finished, the master copy of the Transfer Frame shall be removed from the queue and discarded and the (successful or not successful) transfer of the FDU shall be reported to the Higher Procedures by means of a 'Confirm Response' (Positive or Negative).

5.1.8 EXPECTED_ACKNOWLEDGEMENT_FRAME_SEQUENCE_NUMBER (NN(R))

The Expected_Acknowledgement_Frame_Sequence_Number, NN(R), contains the Frame Sequence Number of the oldest unacknowledged AD Frame, which is on the Sent_Queue. This value is often equal to the value of N(R) from the previous CLCW on that Virtual Channel. Certain Directives set the value of NN(R). 'NN(R)-1' is the value of the Frame

Sequence Number of the latest Type-AD Transfer Frame which FOP-1 can guarantee has arrived safely. Because of the loop delay in the communications link, this value may lag behind the value of the Receiver_Frame_Sequence_Number, V(R) at the receiving end.

5.1.9 TIMER_INITIAL_VALUE (T1_INITIAL)

Whenever a Type-AD or Type-BC Transfer Frame is transmitted, the Timer shall be started or restarted with an initial value of Timer_Initial_Value (T1_Initial).

If a Transfer Frame is lost on the communications link, no positive acknowledgement for that Transfer Frame shall be seen in the CLCW. If no later Type-AD or Type-BC Transfer Frame were transmitted on that Virtual Channel, there would be no way for FOP-1 to discover that the Transfer Frame had not arrived. Therefore, each Virtual Channel has a Timer which is started whenever a Transfer Frame is transmitted or retransmitted. If an acknowledgement is seen for the Transfer Frame, and no subsequent Transfer Frame has been transmitted, then the Timer shall be cancelled. If the Timer expires and the Transmission_Count has not reached the Transmission_Limit (see 5.1.10.2), it shall cause an event which initiates recovery action in the FOP-1 state machine. If the Timer expires and the Transmission_Count has reached the Transmission_Limit, an Alert [T1] shall be generated.

The Timer shall not be used when a Type-BD Transfer Frame is transmitted.

The value to which the Timer is set when it is started or restarted is referred to as 'T1_Initial', and may be changed using the 'Set T1_Initial' Directive.

For normal operation, the smallest value of T1_Initial shall be the sum of the following delays for a given Virtual Channel:

a) processing time of the procedures and layers below FOP-1 at the sending end;

b) time required to transmit a maximum-length Transfer Frame, including the bits needed for the Communications Link Transmission Unit (CLTU) and coding, as a serial bit stream;

c) propagation time from the sending end to the receiving end (one-way light time, including relay satellite path);

d) processing time of the procedures and layers below FARM-1 at the receiving end;

e) worst-case time required to sample and encode FARM-1 status data as a CLCW;

f) worst-case time required to send out the CLCW in the data structure used in the opposite direction;

g) propagation time in the opposite direction (one-way light time, including relay satellite path);

h) processing time to extract the CLCW from the data structure received in the opposite direction and to deliver it to FOP-1 at the sending end.

NOTE – Considering the dynamic nature of the multiplexing procedures performed by the Lower Procedures, it may not be possible to exactly determine the amount of delay described in item (a) above).

A smaller value of T1_Initial may be useful for deep space communications with long round-trip light times. It can be used to force retransmission of the entire Sent_Queue a specified number of times prior to receipt of any acknowledgement CLCWs. Assuming Timeout_Type is set to '1' (see 5.1.10.3), FOP-1 will be suspended once the maximum number of transmissions is made. Its operation will then be resumed to process the acknowledgement CLCWs. In addition, a small value of T1_Initial can be used to allow the 'Set V(R)' Control Command to be sent without having to verify its acceptance via a CLCW before sending the Type-AD Transfer Frames. In this case once the allowed number of transmissions of the Set V(R) is made, the user shall be alerted and can then issue an 'Initiate AD Service (without CLCW Check)' Directive.

5.1.10 TRANSMISSION COUNT VARIABLES

5.1.10.1 General

When a Type-AD or Type-BC Transfer Frame is lost, the normal recovery procedure is to retransmit it. If, however, there is a serious problem on the underlying communications link, no amount of retransmissions will permit an acknowledgement for the Transfer Frame to appear in the CLCW for the Virtual Channel.

If nothing were done, there would be no way for COP-1 to detect the error. Therefore, all FDUs containing user data passed from the Higher Procedures at the sending end (as well as all directives from the Higher Procedures) have associated with them, at least implicitly, a limit to the number of times the corresponding Transfer Frame is to be transmitted.

In order to keep from declaring that the link has failed when it is in fact getting Transfer Frames into the receiving end, **the transmission count limit shall apply only to the first Transfer Frame on the Sent_Queue**. Once that Transfer Frame is acknowledged, the count is reset, even though the remaining Transfer Frames on the Sent_Queue have already been transmitted, possibly more than once. The effect is that the transmission count can be considered to be associated with the Sent_Queue, rather than with each Transfer Frame; therefore, each Transfer Frame will be transmitted **'at least'** the number of times corresponding to the value given by Transmission_Limit, unless this value is set to 1. In this last case, no retransmission will be tried and each Transfer Frame will be transmitted only once.

Three FOP-1 variables are used for controlling the retransmissions:

a) Transmission_Limit;

b) Timeout_Type (TT);

c) Transmission_Count.

5.1.10.2 Transmission_Limit

The Transmission_Limit holds a value which represents the maximum number of times the first Transfer Frame on the Sent_Queue may be transmitted. This includes the first 'transmission' and any subsequent 'retransmissions' of the Transfer Frame. A Transfer Frame in the Sent_Queue that moves from an intermediate position to the first position may be transmitted a number of times greater than the value given by Transmission_Limit.

The value of the Transmission_Limit may be changed using the 'Set Transmission_Limit' Directive.

5.1.10.3 Timeout_Type (TT)

The Timeout_Type variable is referred to as 'TT'. It may take one of two values, '0' or '1'. It specifies the action to be performed when both the Timer expires and the Transmission_Count (see next variable) has reached the Transmission_Limit (for details, see 5.1.10.4).

5.1.10.4 Transmission_Count

The Transmission_Count variable is used to count the number of transmissions of the first Transfer Frame on the Sent_Queue. The Transmission_Count shall be incremented each time the first Transfer Frame is retransmitted.

When the AD Service is initiated, Transmission_Count shall be set to '1'.

Whenever one or more Transfer Frames are acknowledged and therefore removed from the Sent_Queue, the Transmission_Count shall be reset to '1'. The Transmission_Count shall also be set to '1' when FOP-1 prepares a Type-AD or Type-BC Transfer Frame for transmission and the Sent_Queue was previously empty. All of these actions are defined in detail in 5.2.

For the Expedited Service (BD Service), there is no Transmission_Count variable, because each Type-BD Transfer Frame is only transmitted once.

5.1.10.5 Actions for Retransmission

There are two different sorts of events which may cause FOP-1 to initiate retransmission of one or more Type-AD Transfer Frames:

a) a CLCW arrives which negatively acknowledges a Transfer Frame ('Retransmit Flag' = 1);

   Whenever a CLCW arrives which negatively acknowledges a Transfer Frame ('Retransmit Flag' = 1), FOP-1 checks whether the value of the Transmission_Count has reached the value of the Transmission_Limit. If it has not, FOP-1 SHALL

increment the count and initiate retransmission of the Transfer Frames on the Sent_Queue. If it has, FOP-1 shall generate an 'Alert' notification.

b) the Timer expires (a CLCW positively acknowledging that the last Transfer Frame on the Sent_Queue has not been received within the specified time).

   Whenever the Timer expires (i.e., a CLCW positively acknowledging that the last Transfer Frame on the Sent_Queue has not been received within the specified time), FOP-1 checks whether the value of the Transmission_Count has reached the value of the Transmission_Limit. If it has not, FOP-1 shall increment the count and initiate retransmission of the Transfer Frames on the Sent_Queue. If it has, FOP-1 shall select one of two types of possible actions depending on the value of the Timeout_Type, TT:

   1) if TT = 0, FOP-1 generates an 'Alert' notification;

   2) if TT = 1, FOP-1 suspends the AD Service, which may be resumed later if so required (see definitions of Suspend_State variable (SS) in 5.1.11 and 'Resume AD Service' Directive in 4.1).

There is only one sort of event which may cause FOP-1 to initiate retransmission of a Type-BC Transfer Frame:

a) The Timer expires (a CLCW positively acknowledging the Type-BC Transfer Frame has not been received within the specified time).

b) Whenever the Timer expires, FOP-1 checks whether the value of the Transmission_Count has reached the value of the Transmission_Limit. If it has not, FOP-1 shall increments the count and initiate retransmission of the Type-BC Transfer Frame. If it has, FOP-1 shall generate an 'Alert' Indication.

5.1.11 SUSPEND_STATE (SS)

The Suspend_State variable is referred to as 'SS'. It may take one of five values, from '0' to '4'. It records the state that FOP-1 was in when the AD Service was suspended (as described in subsection 5.1.10). This is the state to which FOP-1 will return should the AD Service be resumed. If SS = 0, the AD Service is deemed not suspended.

5.1.12 FOP_SLIDING_WINDOW_WIDTH (K)

The value to which the FOP_Sliding_Window_Width is set is referred to as 'K' and may be changed using the 'Set FOP_Sliding_Window_Width' Directive.

The FOP Sliding Window is a mechanism which limits the number of Transfer Frames which can be transmitted ahead of the last acknowledged Transfer Frame, i.e., before a CLCW report is received which updates the status of acknowledged Transfer Frames. This is done

to prevent sending a new Transfer Frame with the same sequence number as a rejected Transfer Frame.

The value 'K' shall be set to a value between the following limits:

$$1 \leq K \leq PW$$
and
$$K < 256$$

where 'PW' is the FARM_Positive_Window_Width as defined in subsection 6.1.8, 'FARM Sliding Window Variables'.

5.2 FOP-1 ACTIONS

5.2.1 GENERAL

This section defines the actions used in the FOP-1 State Table (table 5-1). Some of the actions defined here are used in the definition of other actions.

NOTE – It should be noted that the COP-1 Frame Sequence Number is an 8-bit field. Therefore, all arithmetic in the FOP concerning the related fields V(S), N(R) and NN(R) should be performed modulo 256. In particular, this should be taken into account when reading the event conditions contained in the FOP-1 State Tables.

5.2.2 'PURGING THE SENT_QUEUE'

This action includes:

clearing the Sent_Queue by generating a 'Negative Confirm Response to Request to Transfer FDU' for each Transfer Frame on the queue and deleting the Transfer Frame.

NOTES

1 Purging the Sent_Queue occurs as part of the termination or (re)initialization (see Note 2) of an AD Service.

2 Purging is needed when the AD Service is (re)initiated because the FOP may have reached S6 via a Suspend Indication.

5.2.3 'PURGING THE WAIT_QUEUE'

This action includes

clearing the Wait_Queue and generating a 'Reject Response to Request to Transfer FDU' for the queued FDU.

5.2.4 'TRANSMIT TYPE-AD FRAME'

This action includes all the functions necessary to prepare a Type-AD Transfer Frame for transmission. In particular it includes:

a) inserting the current value of V(S) into the N(S) field of the Transfer Frame Primary Header and then incrementing V(S);

b) adding the master copy of the Transfer Frame to the Sent_Queue with the To_Be_Retransmitted_Flag NOT set;

c) if the Sent_Queue was previously empty, setting the Transmission_Count to '1';

d) starting the Timer;

e) setting the AD_Out_Flag to 'Not_Ready';

f) passing a copy of the Transfer Frame to the Lower Procedures using a 'Transmit Request for (AD) Frame'.

5.2.5 'TRANSMIT TYPE-BC FRAME'

This action includes all the functions necessary to prepare a Type-BC Transfer Frame for transmission. In particular it includes:

a) adding the master copy of the Transfer Frame to the Sent_Queue with the To_Be_Retransmitted_Flag NOT set;

b) setting the Transmission_Count to '1';

c) starting the Timer;

d) setting the BC_Out_Flag to 'Not_Ready';

e) passing a copy of the Transfer Frame to the Lower Procedures using a 'Transmit Request for (BC) Frame'.

5.2.6 'TRANSMIT TYPE-BD FRAME'

This action includes all the functions necessary to prepare a Type-BD Transfer Frame for transmission. In particular it includes:

a) setting the BD_Out_Flag to 'Not_Ready';

b) passing a copy of the Transfer Frame to the Lower Procedures using a 'Transmit Request for (BD) Frame'.

5.2.7 'INITIATE AD (OR BC) RETRANSMISSION'

This action includes:

a) passing an 'Abort' Request to the Lower Procedures;

b) incrementing the Transmission_Count;

c) starting the Timer;

d) marking all Type-AD Transfer Frames (or the Type-BC Transfer Frame) on the Sent_Queue as 'To_Be_Retransmitted'.

5.2.8 'REMOVE ACKNOWLEDGED FRAMES FROM SENT_QUEUE'

This action includes:

a) generating a 'Positive Confirm Response to Request to Transfer FDU' for each acknowledged Transfer Frame and deleting the Transfer Frame;

b) updating the value of NN(R);

c) setting the Transmission_Count to '1'.

5.2.9 'LOOK FOR DIRECTIVE'

This action includes:

a) checking if the BC_Out_Flag is set to 'Ready'. If not, no further processing can be performed for retransmitting the Type-BC Transfer Frame until a 'BC_Accept' Response is received from the Lower Procedures for the outstanding 'Transmit Request for (BC) Frame', setting the BC_Out_Flag to 'Ready'.

b) if the BC_Out_Flag is set to 'Ready', checking if the Type-BC Transfer Frame on the Sent_Queue is flagged 'To_Be_Retransmitted'. If so, the flag is set to 'Not_Ready' and a copy of the BC Transfer Frame is passed to the Lower Procedures as a parameter of a 'Transmit Request for (BC) Frame'.

5.2.10 'LOOK FOR FDU'

This action includes:

a) Checking if the AD_Out_Flag is set to 'Ready'. If not, no further processing can be performed for transmitting Type-AD Transfer Frames. (When an 'AD_Accept' Response is received from the Lower Procedures for the outstanding 'Transmit Request for (AD) Frame', FOP-1 will set the AD_Out_Flag to 'Ready' and execute a new 'Look for FDU'.)

b) If the AD_Out_Flag is set to 'Ready', checking if a Type-AD Transfer Frame on the Sent_Queue is flagged 'To_Be_Retransmitted'. If so, the flag is set to 'Not_Ready' and a copy of the first such AD Transfer Frame is passed to the Lower Procedures as a parameter of a 'Transmit Request for (AD) Frame' and the To_Be_Retransmitted_Flag for that Transfer Frame is reset.

c) If no Type-AD Transfer Frame is marked 'To_Be_Retransmitted', checking if both V(S) < NN(R) + K and a Type-AD FDU is available on the Wait_Queue. If so, the FDU is removed from the Wait_Queue, an 'Accept Response to Request to Transfer FDU' is passed to the Higher Layer, and the 'Transmit Type-AD Frame' action for the FDU is performed.

d) If no FDU is available on the Wait_Queue, no further processing is performed.

5.2.11 'ACCEPT'

This action includes:

generating either an 'Accept Response to Request to Transfer FDU' or an 'Accept Response to Directive', depending on the occasion.

5.2.12 'REJECT'

This action includes:

generating either a 'Reject Response to Request to Transfer FDU' or a 'Reject Response to Directive', depending on the occasion.

5.2.13 'CONFIRM'

This action includes:

generating either a 'Positive Confirm Response to Request to Transfer FDU ' or a 'Positive Confirm Response to Directive', depending on the occasion.

5.2.14 'INITIALIZE'

This action includes:

a) purging the Sent_Queue;

b) purging the Wait_Queue;

c) setting the Transmission_Count to '1';

d) setting Suspend_State (SS) to '0'.

5.2.15 'ALERT'

This action includes:

a) canceling the Timer;

b) purging the Sent_Queue;

c) purging the Wait_Queue;

d) completing the processing of any 'Initiate AD Service' Directive by generating a 'Negative Confirm Response to Directive' for the Directive;

e) generating an 'Alert' notification with the Reason Code specified in square brackets in the State Table.

5.2.16 'SUSPEND'

This action includes:

generating a 'Suspend' notification to the Higher Procedures.

5.2.17 'RESUME'

This action includes:

a) starting the Timer;

b) setting Suspend_State (SS) to '0'.

5.2.18 'IGNORE'

This action involves no processing by FOP-1.

5.3 FOP-1 STATE TABLE

5.3.1 STATE MACHINE

FOP-1 is defined as a state machine that is described in a State Table. The basic operation principle of the state machine is that it remains in a 'State' until an 'Event' occurs. When an Event occurs, it is analyzed until it is fully identified, and then the Actions specified for the combination of that Event and that State are executed. Finally, the State variable is updated with the new State value specified for the combination.

The FOP-1 state machine is described in the FOP-1 State Table in table 5-1.

NOTES

1 The FOP-1 defined in this draft Recommendation is FOP-1 Revision B (or simply FOP-1B) that is introduced in Issue 2 of the Command Operation Procedures-1 (reference [B2]). The original FOP-1 (or FOP-1 Revision A) is defined in Issue 1 of the Command Operation Procedures-1 (reference [B4]).

2 A brief explanation on the format of the State Table is given in annex C.

5.3.2 NOTES TO FOP-1 STATE TABLE

5.3.2.1 CLCW Arrival

In the case of the arrival of a CLCW, some operations must be performed by FOP-1 before the FOP-1 State Table is applied. In particular, not included in the FOP-1 State Table are operations such as checking:

a) the 'COP in Effect';

b) the 'Virtual Channel Identifier'.

Included in the FOP-1 State Table are the following operations:

a) checking the value of the 'Lockout' Flag;

b) checking the value of N(R);

c) checking the value of the 'Retransmit' Flag;

d) checking the value of the 'Wait' Flag.

5.3.2.2 CLCW Values

In the FOP-1 State Table, references to the following values pertain to the values in the current CLCW:

a) Lockout Flag;

b) Wait Flag;

c) Retransmit Flag;

d) N(R).

5.3.3 FOP-1 STATE TRANSITIONS

The FOP-1 State Table is large and the state transitions complex. Therefore, the newcomer may find it helpful to consider initially only the state changes relating to the main protocol. This is shown, for the normal situation in which no exception conditions occur, in figure 5-1. This protocol is capable of automatically handling flow control and error control (providing

the quality of the link is not so low that a maximum of Transmission_Limit transmissions fail to transfer a Transfer Frame to the receiving end). It is not capable of handling improper operation of the communications link, which can be caused, for example, by two sending ends simultaneously sending Transfer Frames to the same receiving end.

Next, consideration should be given to the initialization protocol, which is used to initiate and terminate a session using the AD Service. This is shown in figure 5-2, which shows the main protocol States (S1), (S2) and (S3) coalesced into a single state. The FOP-1 State Table distinguishes among many events, all of which should never occur. If one of these situations is detected, an 'Alert' notification is passed to the Higher Procedures and FOP-1 enters the 'Initial' State (S6). Except for Alert[term] after a 'Terminate AD Service' Directive, all these traps are grouped under 'Exceptions' in figure 5-2. The 'Exceptions' also include Suspend.

A detailed summary of the way FOP-1 moves between all States is given in figure 5-3.

Table 5-1: FOP-1 State Table (Part 1)

State Name	ACTIVE	RETRANSMIT WITHOUT WAIT	RETRANSMIT WITH WAIT	INITIALIZING WITHOUT BC FRAME	INITIALIZING WITH BC FRAME	INITIAL
Main Feature of State	Last CLCW showed: Lockout Flag = 0, Retransmit Flag = 0, Wait Flag = 0	Last CLCW showed: Lockout Flag = 0, Retransmit Flag = 1, Wait Flag = 0	Last CLCW showed: Lockout Flag = 0, Retransmit Flag = 1, Wait Flag = 1	Initiate AD Service (with CLCW check) Directive received and 'clean' status not seen since	Type BC frame transmitted and 'clean' status not seen since	Not configured for AD Service
State Number	S1	S2	S3	S4	S5	S6

Event Conditions						Event Number						
CLCW arrives formed from a valid COP-1 pattern	Lockout Flag = 0	N(R) = V(S) i.e.: Valid N(R) and all outstanding type AD frames acknowl-edged	Retransmit Flag = 0	Wait Flag = 0	N(R) = NN(R) i.e.: no new frames acknowl-edged	E1	Ignore (S1)	Alert [synch] (S6)	Alert [synch] (S6)	Confirm, Cancel Timer (S1)	Confirm, Release copy of type BC frame, Cancel Timer (S1)	Ignore (S6)
					N(R) < > NN(R) i.e.: some new frames acknowl-edged	E2	Remove acknowledged frames from Sent_Queue, Cancel Timer, Look for FDU (S1)	Remove acknowledged frames from Sent_Queue, Cancel Timer, Look for FDU (S1)	Remove acknowledged frames from Sent_Queue, Cancel Timer, Look for FDU (S1)	Not Applicable	Not Applicable	Ignore (S6)
				Wait Flag = 1		E3	Alert [CLCW] (S6)	Alert [CLCW] (S6)	Alert [CLCW] (S6)	Alert [CLCW] (S6)	Alert [CLCW] (S6)	Ignore (S6)
			Retransmit Flag = 1			E4	Alert [synch] (S6)	Alert [synch] (S6)	Alert [synch] (S6)	Alert [synch] (S6)	Ignore (S5)	Ignore (S6)

Table 5-1: FOP- 1 State Table (Part 2)

								State Name	ACTIVE	RETRANSMIT WITHOUT WAIT	RETRANSMIT WITH WAIT	INITIALIZING WITHOUT BC FRAME	INITIALIZING WITH BC FRAME	INITIAL
								State Number	S1	S2	S3	S4	S5	S6
Continued: CLCW arrives formed from a valid COP-1 pattern	Continued: Lockout Flag = 0	N(R) < V(S) and N(R) ≥ NN(R) i.e.: Valid N(R) and some outstanding type AD frames not yet acknowl-edged	Retransmit Flag = 0		Wait Flag = 0	N(R) = NN(R) i.e.: no new frames acknowl-edged	E5		Ignore (S1)	Alert [synch] (S6)	Alert [synch] (S6)	Not Applicable	Not Applicable	Ignore (S6)
						N(R) < > NN(R) i.e.: some new frames acknowl-edged	E6 Rev.B		Remove acknowledged frames from Sent_Queue, Look for FDU (S1)	Remove acknowledged frames from Sent_Queue, Look for FDU (S1)	Remove acknowledged frames from Sent_Queue, Look for FDU (S1)	Not Applicable	Not Applicable	Ignore (S6)
					Wait Flag = 1		E7 Rev.B		Alert [CLCW] (S6)	Alert [CLCW] (S6)	Alert [CLCW] (S6)	Not Applicable	Not Applicable	Ignore (S6)
			Retransmit Flag = 1	Transmission Limit = 1	N(R) < > NN(R) i.e.: some new frames acknowl-edged		E101		Remove acknowledged frames from Sent_Queue Alert [Limit] (S6)	Remove acknowledged frames from Sent_Queue Alert [Limit] (S6)	Remove acknowledged frames from Sent_Queue Alert [Limit] (S6)	Not Applicable	Not Applicable	Ignore (S6)
					N(R) = NN(R) i.e.: no new frames acknowledged		E102		Alert [Limit] (S6)	Alert [Limit] (S6_	Alert [Limit] (S6)	Not Applicable	Not Applicable	Ignore (S6)
				Transmission Limit > 1	N(R) < > NN(R) i.e.: some new frames acknowl-edged	Wait Flag = 0	E8 Rev.B		Remove acknowledged frames from Sent_Queue, Initiate AD Retransmission, Look for FDU (S2)	Remove acknowledged frames from Sent_Queue, Initiate AD Retransmission, Look for FDU (S2)	Remove acknowledged frames from Sent_Queue, Initiate AD Retransmission, Look for FDU (S2)	Not Applicable	Not Applicable	Ignore (S6)
						Wait Flag = 1	E9 Rev.B		Remove acknowledged frames from Sent_Queue (S3)	Remove acknowledged frames from Sent_Queue (S3)	Remove acknowledged frames from Sent_Queue (S3)	Not Applicable	Not Applicable	Ignore (S6)

Table 5-1: FOP- 1 State Table (Part 3)

State Name	ACTIVE	RETRANSMIT WITHOUT WAIT	RETRANSMIT WITH WAIT	INITIALIZING WITHOUT BC FRAME	INITIALIZING WITH BC FRAME	INITIAL
State Number	S1	S2	S3	S4	S5	S6
Continued: CLCW arrives formed from a valid COP-1 pattern; Continued: Lockout Flag = 0; Continued: N(R) < V(S) and N(R) ≥ NN(R) i.e.: Valid N(R) and some outstanding type AD frames not yet acknowl-edged; Continued: Retransmit Flag = 1; Continued: Transmis-sion Limit > 1; N(R) = NN(R) i.e.: no new frames acknowl-edged; Trans-mission_ Count < Trans-mission_ Limit; Wait Flag = 0	E10 Rev.B	Initiate AD Retrans-mission, Look for FDU (S2)	Ignore (S2)	Initiate AD Retrans-mission, Look for FDU (S2)	Not Applicable	Not Applicable	Ignore (S6)
Wait Flag = 1	E11 Rev.B	Ignore (S3)	Ignore (S3)	Ignore (S3)	Not Applicable	Not Applicable	Ignore (S6)
Transmiss ion_ Count ≥ Transmiss ion_ Limit; Wait Flag = 0	E12 Rev.B	Ignore (S2)	ignore (S2)	ignore (S2)	Not Applicable	Not Applicable	Ignore (S6)
Wait Flag = 1	E103	Ignore (S3)	Ignore (S3)	Ignore (S3)	Not Applicable	Not Applicable	Ignore (S6)
Invalid N(R) i.e.: N(R) < NN(R) or N(R) > V(S)	E13	Alert [NN(R)] (S6)	Alert [NN(R)] (S6)	Alert [NN(R)] (S6)	Alert [NN(R)] (S6)	Ignore (S5)	Ignore (S6)
Lockout Flag = 1	E14	Alert [Lockout] (S6)	Alert [Lockout] (S6)	Alert [Lockout] (S6)	Alert [Lockout] (S6)	Ignore (S5)	Ignore (S6)
CLCW arrives with pattern of bits invalid under	E15	Alert [CLCW] (S6)	Alert [CLCW] (S6)	Alert [CLCW] (S6)	Alert [CLCW] (S6)	Alert [CLCW] (S6)	Ignore (S6)
Timer Expires; Transmission_ Count < Transmission_ Limit; Timeout_Type (TT) = 0	E16 Rev.B	Initiate AD Retrans-mission, Look for FDU (S1)	Initiate AD Retrans-mission, Look for FDU (S2)	Ignore (S3)	Alert [T1] (S6)	Initiate BC Retrans-mission, Look for Directive (S5)	Not Applicable
Timeout_Type (TT) = 1	E104	Initiate AD Retrans-mission, Look for FDU (S1)	Initiate AD Retrans-mission, Look for FDU (S2)	Ignore (S3)	SS: = 4 Suspend (S6)	Initiate BC Retrans-mission, Look for Directive (S5)	Not Applicable
Trans-mission Count ≥ Trans-mission Limit; Timeout_Type (TT) = 0	E17 Rev.B	Alert [T1] (S6)	Alert [T1] (S6)	Alert [T1] (S6)	Alert [T1] (S6)	Alert [T1] (S6)	Not Applicable
Timeout_Type (TT) = 1	E18 Rev.B	SS: = 1 Suspend (S6)	SS: = 2 Suspend (S6)	SS: = 3 Suspend (S6)	SS: = 4 Suspend (S6)	Alert [T1] (S6)	Not Applicable

Table 5-1: FOP- 1 State Table (Part 4)

				State Name	ACTIVE	RETRANSMIT WITHOUT WAIT	RETRANSMIT WITH WAIT	INITIALIZING WITHOUT BC FRAME	INITIALIZING WITH BC FRAME	INITIAL
				State Number	S1	S2	S3	S4	S5	S6
Receive Request to Transfer FDU	AD Service	Wait_Queue empty	E19		Add to Wait_Queue, Look for FDU (S1)	Add to Wait_Queue, Look for FDU (S2)	Add to Wait_Queue (S3)	Reject (S4)	Reject (S5)	Reject (S6)
		Wait_Queue not empty	E20		Reject (S1)	Reject (S2)	Reject (S3)	Reject (S4)	Reject (S5)	Reject (S6)
	BD Service	BD_Out_Flag = Ready	E21 Rev.B		Accept, Transmit User Data type BD frame (S1)	Accept, Transmit User Data type BD frame (S2)	Accept, Transmit User Data type BD frame (S3)	Accept, Transmit User Data type BD frame (S4)	Accept, Transmit User Data type BD frame (S5)	Accept, Transmit User Data type BD frame (S6)
		BD_Out_Flag = Not_Ready	E22		Reject (S1)	Reject (S2)	Reject (S3)	Reject (S4)	Reject (S5)	Reject (S6)
Receive Directive from Manage-ment Function	Initiate AD Service (without CLCW check) Directive		E23		Reject (S1)	Reject (S2)	Reject (S3)	Reject (S4)	Reject (S5)	Accept, Initialize, Confirm (S1)
	Initiate AD Service (with CLCW check) Directive		E24		Reject (S1)	Reject (S2)	Reject (S3)	Reject (S4)	Reject (S5)	Accept, Initialize, Start Timer (S4)
	Initiate AD Service (with Unlock) Directive	BC_Out_Flag = Ready	E25 Rev.B		Reject (S1)	Reject (S2)	Reject (S3)	Reject (S4)	Reject (S5)	Accept, Initialize, Transmit Unlock type BC Frame (S5)
		BC_Out_Flag = Not_Ready	E26		Reject (S1)	Reject (S2)	Reject (S3)	Reject (S4)	Reject (S5)	Reject (S6)

Table 5-1: FOP- 1 State Table (Part 5)

				State Name	ACTIVE	RETRANSMIT WITHOUT WAIT	RETRANSMIT WITH WAIT	INITIALIZING WITHOUT BC FRAME	INITIALIZING WITH BC FRAME	INITIAL
				State Number	S1	S2	S3	S4	S5	S6
Continued: Receive Directive from Manage-ment Function	Initiate AD Service (with Set V(R)) Directive	BC_Out_Flag = Ready	E27 Rev.B		Reject (S1)	Reject (S2)	Reject (S3)	Reject (S4)	Reject (S5)	Accept, Initialize, V(S): = V*(R), NN(R): = V*(R), Transmit Set V(R) type BC Frame (S5)
		BC_Out_Flag = Not_Ready	E28		Reject (S1)	Reject (S2)	Reject (S3)	Reject (S4)	Reject (S5)	Reject (S6)
	Terminate AD Service Directive		E29		Accept, Alert [term], Confirm (S6)	Accept, Alert [term], Confirm (S6)	Accept, Alert [term], Confirm (S6)	Accept, Alert [term], Confirm (S6)	Accept, Alert [term], Confirm (S6)	Accept, Confirm (S6)
	Resume AD Service Directive	SS = 0	E30		Reject (S1)	Reject (S2)	Reject (S3)	Reject (S4)	Reject (S5)	Reject (S6)
		SS = 1	E31 Rev.B		Not Applicable	Not Applicable	Not Applicable	Not Applicable	Not Applicable	Accept, Resume, Confirm (S1)
		SS = 2	E32 Rev.B		Not Applicable	Not Applicable	Not Applicable	Not Applicable	Not Applicable	Accept, Resume, Confirm (S2)
		SS = 3	E33 Rev.B		Not Applicable	Not Applicable	Not Applicable	Not Applicable	Not Applicable	Accept, Resume, Confirm (S3)
		SS = 4	E34 Rev.B		Not Applicable	Not Applicable	Not Applicable	Not Applicable	Not Applicable	Accept, Resume, Confirm (S4)

Table 5-1: FOP- 1 State Table (Part 5)

				State Name	ACTIVE	RETRANSMIT WITHOUT WAIT	RETRANSMIT WITH WAIT	INITIALIZING WITHOUT BC FRAME	INITIALIZING WITH BC FRAME	INITIAL
				State Number	S1	S2	S3	S4	S5	S6
Continued: Receive Directive from Manage-ment Function	Initiate AD Service (with Set V(R)) Directive	BC_Out_Flag = Ready	E27 Rev.B		Reject (S1)	Reject (S2)	Reject (S3)	Reject (S4)	Reject (S5)	Accept, Initialize, V(S): = V*(R), NN(R): = V*(R), Transmit Set V(R) type BC Frame (S5)
		BC_Out_Flag = Not_Ready	E28		Reject (S1)	Reject (S2)	Reject (S3)	Reject (S4)	Reject (S5)	Reject (S6)
	Terminate AD Service Directive		E29		Accept, Alert [term], Confirm (S6)	Accept, Alert [term], Confirm (S6)	Accept, Alert [term], Confirm (S6)	Accept, Alert [term], Confirm (S6)	Accept, Alert [term], Confirm (S6)	Accept, Confirm (S6)
	Resume AD Service Directive	SS = 0	E30		Reject (S1)	Reject (S2)	Reject (S3)	Reject (S4)	Reject (S5)	Reject (S6)
		SS = 1	E31 Rev.B		Not Applicable	Not Applicable	Not Applicable	Not Applicable	Not Applicable	Accept, Resume, Confirm (S1)
		SS = 2	E32 Rev.B		Not Applicable	Not Applicable	Not Applicable	Not Applicable	Not Applicable	Accept, Resume, Confirm (S2)
		SS = 3	E33 Rev.B		Not Applicable	Not Applicable	Not Applicable	Not Applicable	Not Applicable	Accept, Resume, Confirm (S3)
		SS = 4	E34 Rev.B		Not Applicable	Not Applicable	Not Applicable	Not Applicable	Not Applicable	Accept, Resume, Confirm (S4)

Table 5-1: FOP- 1 State Table (Part 6)

			State Name	ACTIVE	RETRANSMIT WITHOUT WAIT	RETRANSMIT WITH WAIT	INITIALIZING WITHOUT BC FRAME	INITIALIZING WITH BC FRAME	INITIAL
			State Number	S1	S2	S3	S4	S5	S6
Continued: Receive Directive from Manage-ment Function	Set V(S) to V*(S) Directive	E35 Rev.B		Reject (S1)	Reject (S2)	Reject (S3)	Reject (S4)	Reject (S5)	IF SS=0 Accept, V(S): = V*(S), NN(R): = V*(S), Confirm ELSE Reject (S6)
	Set FOP_Sliding Window_Width Directive	E36		Accept, Set K, Confirm (S1)	Accept, Set K, Confirm (S2)	Accept, Set K, Confirm (S3)	Accept, Set K, Confirm (S4)	Accept, Set K, Confirm (S5)	Accept, Set K, Confirm (S6)
	Set T1_Initial Directive	E37		Accept, Set T1_Initial, Confirm (S1)	Accept, Set T1_Initial, Confirm (S2)	Accept, Set T1_Initial, Confirm (S3)	Accept, Set T1_Initial, Confirm (S4)	Accept, Set T1_Initial, Confirm (S5)	Accept, Set T1_Initial, Confirm (S6)
	Set Transmission_Limit Directive	E38		Accept, Set Trans-mission_ Limit, Confirm (S1)	Accept, Set Trans-mission_ Limit, Confirm (S2)	Accept, Set Trans-mission_ Limit, Confirm (S3)	Accept, Set Trans-mission_ Limit, Confirm (S4)	Accept, Set Trans-mission_ Limit, Confirm (S5)	Accept, Set Trans-mission_ Limit, Confirm (S6)
	Set Timeout_Type Directive	E39		Accept, Set TT, Confirm (S1)	Accept, Set TT, Confirm (S2)	Accept, Set TT, Confirm (S3)	Accept, Set TT, Confirm (S4)	Accept, Set TT, Confirm (S5)	Accept, Set TT, Confirm (S6)
	Invalid Directive	E40		Reject (S1)	Reject (S2)	Reject (S3)	Reject (S4)	Reject (S5)	Reject (S6)

Table 5-1: FOP- 1 State Table (Part 7)

			State Name	ACTIVE	RETRANSMIT WITHOUT WAIT	RETRANSMIT WITH WAIT	INITIALIZING WITHOUT BC FRAME	INITIALIZING WITH BC FRAME	INITIAL
			State Number	S1	S2	S3	S4	S5	S6
Receive Response from Lower Layer	AD_Accept	E41		AD_Out_Flag = Ready, Look for FDU (S1)	AD_Out_Flag = Ready, Look for FDU (S2)	AD_Out_Flag = Ready (S3)	AD_Out_Flag = Ready (S4)	AD_Out_Flag = Ready (S5)	AD_Out_Flag = Ready (S6)
	AD_Reject	E42		Alert [LLIF] (S6)	Alert [LLIF] (S6)	Alert [LLIF] (S6)	Alert [LLIF] (S6)	Alert [LLIF] (S6)	Alert [LLIF] (S6)
	BC_Accept	E43		BC_Out_Flag = Ready (S1)	BC_Out_Flag = Ready (S2)	BC_Out_Flag = Ready (S3)	BC_Out_Flag = Ready (S4)	BC_Out_Flag = Ready, Look for Directive (S5)	BC_Out_Flag = Ready (S6)
	BC_Reject	E44		Alert [LLIF] (S6)	Alert [LLIF] (S6)	Alert [LLIF] (S6)	Alert [LLIF] (S6)	Alert [LLIF] (S6)	Alert [LLIF] (S6)
	BD_Accept	E45		BD_Out_Flag = Ready, Accept (S1)	BD_Out_Flag = Ready, Accept (S2)	BD_Out_Flag = Ready, Accept (S3)	BD_Out_Flag = Ready, Accept (S4)	BD_Out_Flag = Ready, Accept (S5)	BD_Out_Flag = Ready, Accept (S6)
	BD_Reject	E46		Alert [LLIF] (S6)	Alert [LLIF] (S6)	Alert [LLIF] (S6)	Alert [LLIF] (S6)	Alert [LLIF] (S6)	Alert [LLIF] (S6)

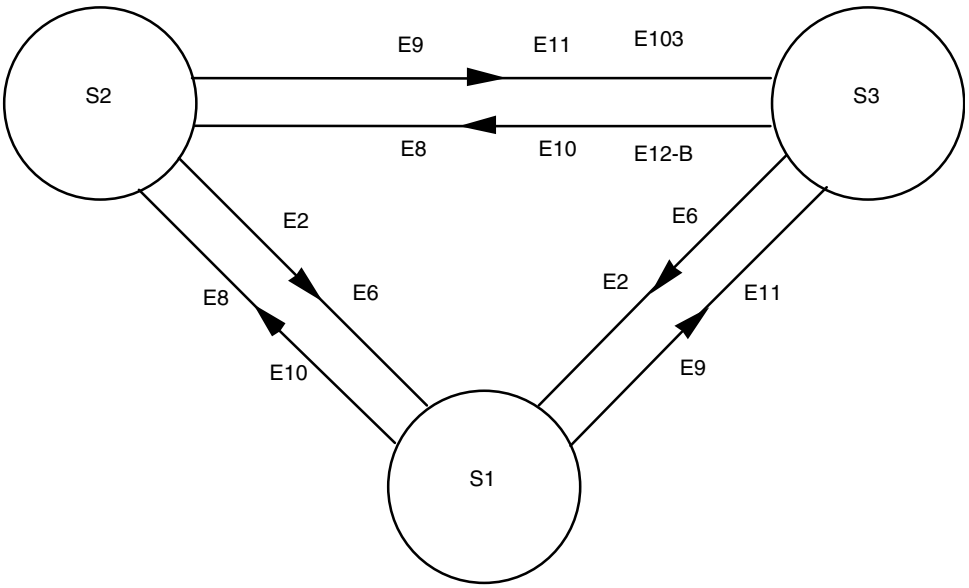

Figure 5-1: FOP-1 State Transitions: Main Protocol

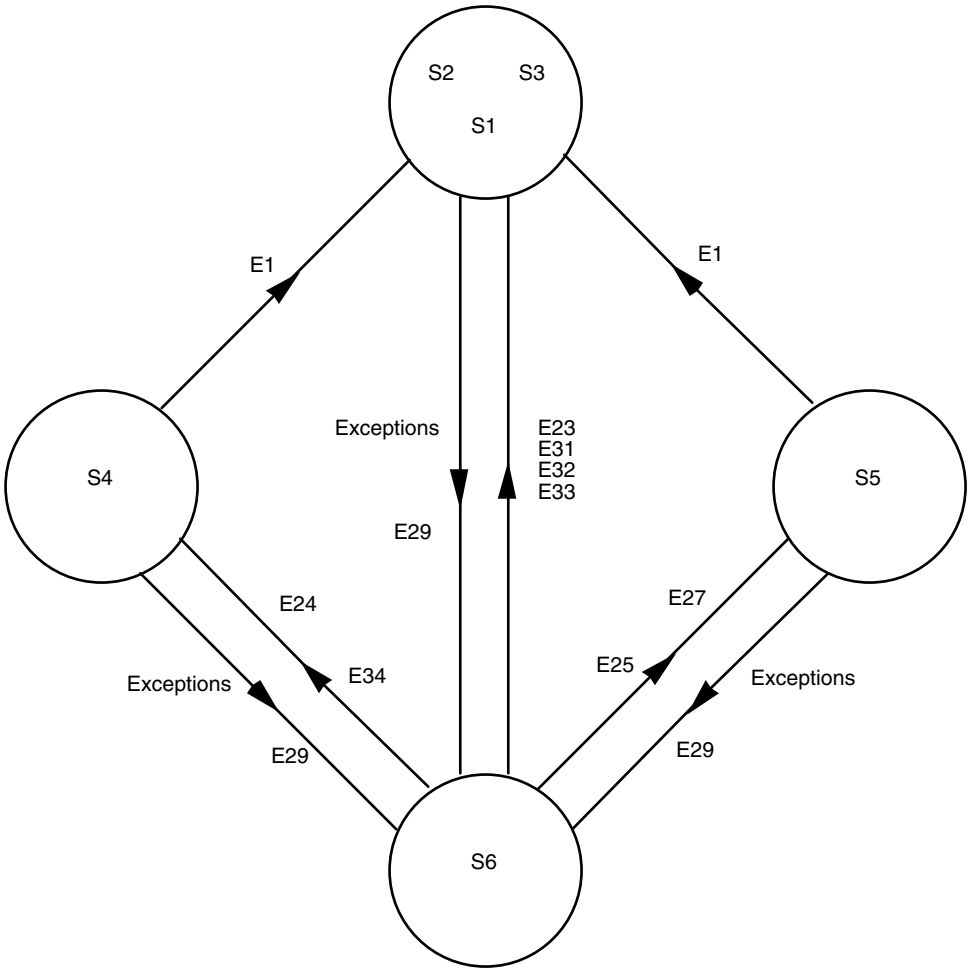

Figure 5-2: FOP-1 State Transitions: Initialization Protocol

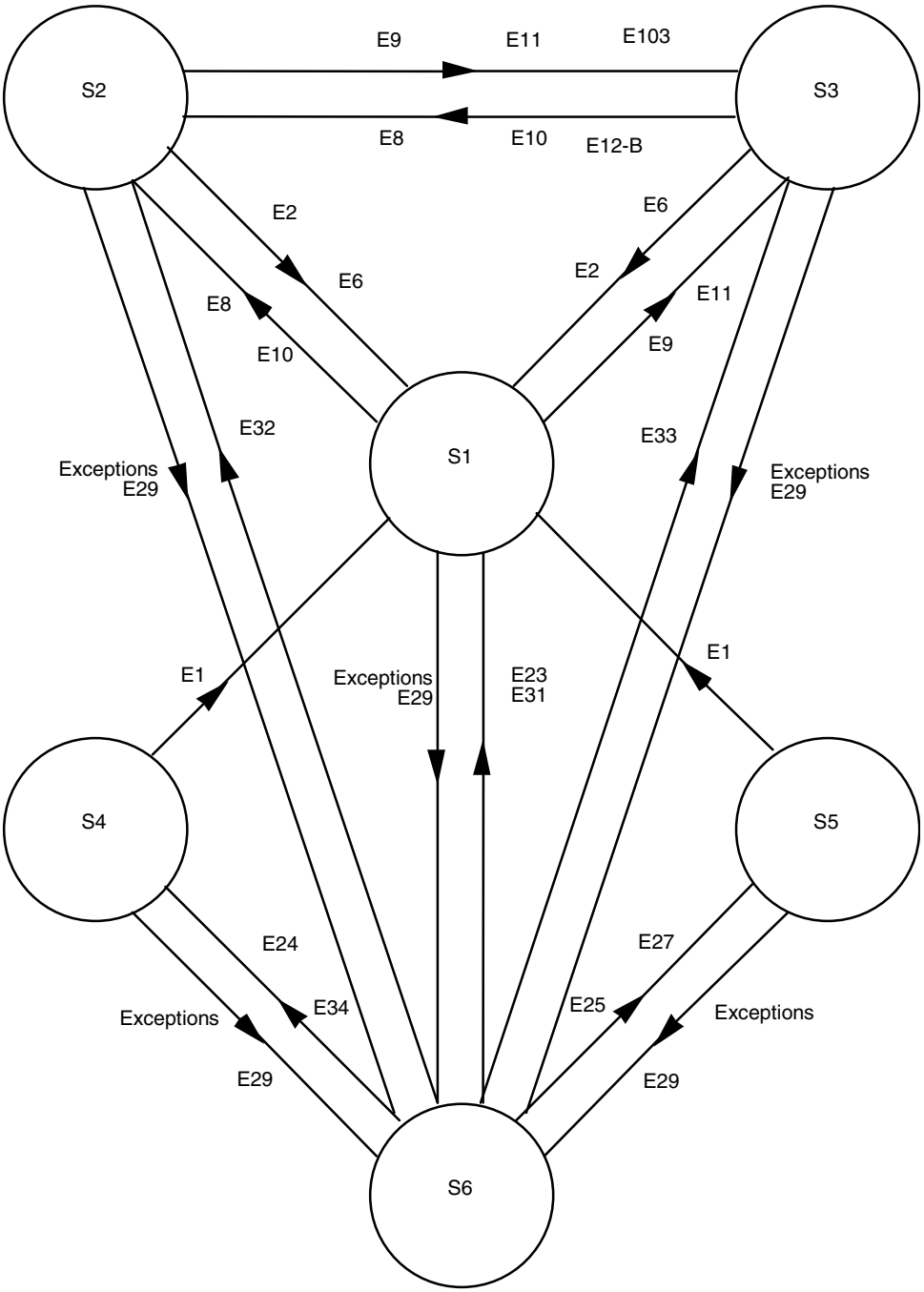

Figure 5-3: FOP-1 State Transitions

6 FARM-1

6.1 FARM-1 VARIABLES

6.1.1 GENERAL

This section describes the variables used by the Frame Acceptance and Reporting Mechanism (FARM)-1 state machine. The complete meaning of these variables can only be fully understood in conjunction with a careful reading of the FARM-1 State Tables (table 6-1). These tables, along with the associated actions defined in 6.2, contain the master definition of FARM-1.

The variables defined in this section are part of the definition of FARM-1. Any implementation of FARM-1 is likely to have in addition private, implementation-dependent variables.

FARM-1 maintains the following variables for each Virtual Channel:

a) State;

b) Lockout_Flag;

c) Wait_Flag;

d) Retransmit_Flag;

e) Receiver_Frame_Sequence_Number (usually referred to as 'V(R)');

f) FARM-B_Counter;

g) FARM_Sliding_Window_Width (also known as 'W');

h) FARM_Positive_Window_Width (also known as 'PW');

i) FARM_Negative_Window_Width (also known as 'NW').

These variables are described in detail in subsections 6.1.2 through 6.1.8.

6.1.2 STATE

The State of FARM-1 may be one of the following:

a) Open (S1);

b) Wait (S2);

c) Lockout (S3).

This variable represents the state of FARM-1 for the specific Virtual Channel. Each value of the State variable corresponds to a column in the FARM-1 State Table.

In 'Open' State, the state machine accepts in-sequence Transfer Frames and passes them to the Higher Procedures.

In 'Wait' State, there is no buffer space available in which to place any further received Type-A FDUs. The state machine enters the 'Wait' State when it has received a Type-A FDU, but is unable to deliver it to the Higher Procedures because there is no buffer available (see 3.2.2). It leaves the 'Wait' State when at least one buffer becomes available for placing a Type-A FDU.

'Lockout' State is entered if the state machine receives a Transfer Frame with sequence number N(S) outside the range expected if FOP-1 is operating correctly. It is a safe state in that no Type-A FDUs will be accepted or transferred to the Higher Procedures when in the 'Lockout' State. The state machine leaves the 'Lockout' State upon receipt of an 'Unlock' Control Command.

6.1.3 LOCKOUT_FLAG

The Lockout_Flag is set to '1' whenever the state machine is in 'Lockout' State; otherwise, it is '0'. When the CLCW is to be encoded for a particular Virtual Channel, the value of this flag is inserted into the 'Lockout' Flag field of the CLCW of that Virtual Channel.

6.1.4 WAIT_FLAG

The Wait_Flag is set to '1' whenever the state machine is in 'Wait' State; otherwise, it is '0'. When the CLCW is to be encoded for a particular Virtual Channel, the value of this flag is inserted into the 'Wait' Flag field of the CLCW of that Virtual Channel.

6.1.5 RETRANSMIT_FLAG

The Retransmit_Flag is set to '1' whenever the state machine knows that a Type-AD Transfer Frame has been lost in transmission or has been discarded because there was no buffer space available; otherwise, it is '0'. When the CLCW is to be encoded for a particular Virtual Channel, the value of this flag is inserted into the 'Retransmit' Flag field of the CLCW of that Virtual Channel. At the sending end, the 'set' condition of this flag forms a negative acknowledgement of all previously transmitted Transfer Frames with N(S) equal to or greater than N(R). The flag will be reset to '0' upon successful receipt of a Transfer Frame with N(S) = V(R), receipt of a 'Set V(R)' Control Command (unless in 'Lockout' State) or receipt of an 'Unlock' Control Command.

6.1.6 FARM-B_COUNTER

This variable is incremented whenever a valid Type-BD or Type-BC Transfer Frame arrives. The value of this variable is inserted into the CLCW, but is not used by the COP-1 state machines at either end of the link. The counter is intended for use by layers above the Data

Link Layer to offer a minimal facility for a higher layer error-control loop when the Expedited Service (BD Service) is used.

NOTES

1 How the higher layers at the sending end access the CLCW to obtain the value of the FARM-B_Counter is not defined in this draft Recommendation. It is implementation-dependent.

2 Some implementations may choose to maintain a FARM-B_Counter with more than two bits. In this case, only the two least significant bits are placed in the CLCW. The full counter may be communicated to the sending end by other means.

6.1.7 RECEIVER_FRAME_SEQUENCE_NUMBER V(R)

This variable records the value of N(S) expected to be seen in the next Type-AD Transfer Frame on this Virtual Channel

6.1.8 FARM SLIDING WINDOW VARIABLES

6.1.8.1 Purpose

The purpose of the COP-1 Sliding Windows is to protect FARM-1 against the unauthorized (uncontrolled) transfer of a sequence of Transfer Frames such that the Frame Sequence Number, N(S), of one or more of these Transfer Frames will exceed the current value of the Receiver_Frame_Sequence_Number, V(R), by at least 256.

The purpose of the FOP Sliding Window (defined in terms of its width, 'K', in 5.1.12, 'FOP_Sliding_Window_Width (K)') is to limit the number of Transfer Frames which can be transmitted safely ahead of the last acknowledged Transfer Frame. The purpose of the FARM Sliding Window is to protect FARM-1 against any malfunction or erroneous setup of FOP-1.

The FARM Sliding Window is defined in terms of three variables:

a) its total width, referred to as 'W';

b) the width of its positive part, referred to as 'PW';

c) the width of its negative part, referred to as 'NW'.

The three variables are specified in the subsections 6.1.8.2 and 6.1.8.3, as are the main related actions. Figure 6-1 illustrates the FARM Sliding Window concept with its different sections and actions.

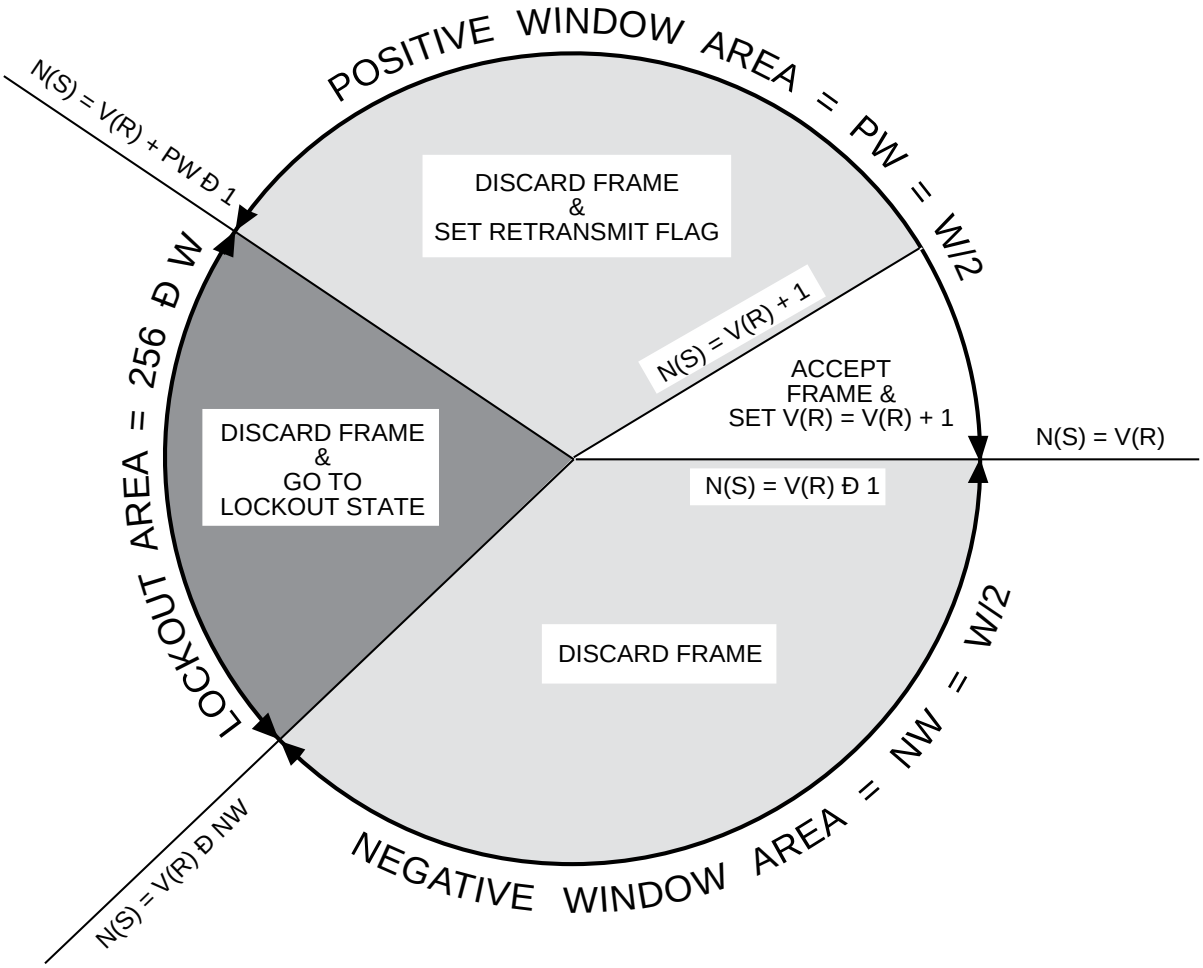

Figure 6-1: FARM Sliding Window Concept

6.1.8.2 FARM_Sliding_Window_Width (W)

The FARM_Sliding_Window_Width is referred to as 'W' and gives the range over which the Frame Sequence Numbers of received Type-AD Transfer Frames may vary without lockout occurring.

The value 'W' shall be set to a value between the following limits:

$$2 \leq W \leq 254$$

where 'W' is always an EVEN integer.

Unless otherwise specified, the value 'W' shall be fixed for the entire duration of the mission. In particular, there are no COP-1 control commands for changing the value.

6.1.8.3 FARM_Positive_Window_Width (PW) and FARM_Negative_Window_Width (NW)

As shown in figure 6-1:

a) the FARM Positive Window area starts with V(R) and extends PW Transfer Frames in the positive direction;

b) the FARM Negative Window area starts at V(R) – 1 (the number of the last accepted Transfer Frame) and extends NW Transfer Frames in the negative direction.

The widths of both parts of the FARM Sliding Window are specified as follows:

$$PW = NW = W/2$$

A Frame Sequence Number, N(S), falls outside the FARM Sliding Window (e.g., into the lockout area of width 256 – W) when:

$$N(S) > V(R) + PW - 1$$
and
$$N(S) < V(R) - NW$$

When the Transfer Frame is in the lockout area, FARM-1 will discard the Transfer Frame, go into the 'Lockout' State and set the 'Lockout' Flag.

When N(S) falls inside the FARM Sliding Window, one of the following three cases will occur:

a) First case:

$$N(S) = V(R)$$

The Transfer Frame is in the Positive Window and contains the expected Frame Sequence Number; the Transfer Frame is accepted. This is the case when COP-1 is operating correctly and no previous Transfer Frames have been lost or discarded. It is also the case when retransmitted Transfer Frames are received after they have been lost or discarded.

a) Second case:

$$N(S) > V(R)$$
and
$$N(S) \leq V(R) + PW - 1$$

The Transfer Frame is in the Positive Window and does not contain the expected Frame Sequence Number; the Transfer Frame is discarded and the Retransmit_Flag is set, if it has not already been set. This case occurs when a previous Transfer Frame has been lost or discarded and retransmission has not yet started.

b) Third case:

$$N(S) < V(R)$$
and
$$N(S) \geq V(R) - NW$$

The Transfer Frame is in the Negative Window and is discarded without any other action being taken. This case occurs if Transfer Frames are retransmitted even though they have been accepted. This could happen, for example, if the FOP T1_Initial has been set to a too-small value or if there is a link outage. It may occur during operations using the forced-retransmission mechanism for deep space missions.

Certain missions may require only a single transmission of a sequence of Type-AD Transfer Frames in one COP-1 session (Transmission_Limit = 1), whether in the Suspend/Resume mode of operation or not. For such missions and in such a mode, it is permitted to set PW > NW, with, ultimately, NW = 0 and PW = W, where 'W' can be any integer between 1 and 256 inclusive. Thus:

$$PW \leq W$$
and
$$1 \leq W \leq 256$$
and
$$1 \leq PW \leq 256$$

Whatever the value of PW, the value of the FOP_Sliding_Window_Width (K) may never exceed 255.

6.2 FARM-1 ACTIONS

6.2.1 GENERAL

This section defines the actions used in the FARM-1 State Table (table 6-1). Some of the actions defined here are used in the definition of other actions.

NOTE – It should be noted that the COP-1 Frame Sequence Number is an 8-bit field. Therefore, all arithmetic in the FARM concerning the related fields V(R), N(S) PW and NW should be performed modulo 256. In particular, this should be taken into account when reading the event conditions contained in the FARM-1 State Tables.

6.2.2 'ACCEPT'

This action involves:

a) placing the FDU contained by the Transfer Frame in a buffer;

b) generating an 'FDU Arrived Indication' signal to the Higher Procedures. If a Type-BD FDU has been placed in a buffer erasing another unread FDU, an optional 'Aborted Indication' may be sent to the Higher Procedures.

6.2.3 'DISCARD'

This action involves:

Discarding the received Transfer Frame.

6.2.4 'REPORT'

This action involves:

Generating information to be placed in the CLCW based on the current status of FARM-1.

6.2.5 'IGNORE'

This action involves no processing by FARM-1.

6.3 FARM-1 STATE TABLE

6.3.1 STATE MACHINE

FARM-1 is defined as a state machine that is described in a State Table. The basic operation principle of the state machine is that it remains in a 'State' until an 'Event' occurs. When an Event occurs, it is analyzed until it is fully identified and then the Actions specified for the combination of that Event and that State are executed. Finally, the State variable is updated with the new State value specified for the combination.

The FARM-1 state machine is described in the FARM-1 State Table in table 6-1.

NOTE – A brief explanation on the format of the State Table is given in Annex C.

6.3.2 NOTES TO FARM-1 STATE TABLE

6.3.2.1 Transfer Frame Validation

Not included in the FARM-1 State Table are operations concerning the validation of the Transfer Frame. The event 'Valid Frame Arrives' means that the Lower Procedures have placed a 'valid' Transfer Frame (a Transfer Frame that has passed the Frame Validation Check defined in reference [3]) into a buffer of FARM-1. However, the following operation needs to be performed by FARM-1 before the FARM-1 State Table is applied:

> verifying that a Type-BC Transfer Frame contains one of the two COP-1 control commands ('Unlock' and 'Set V(R)').

Included in the FARM-1 State Table are the following operations:

a) checking the value of the 'Bypass' Flag;

b) checking the value of the 'Control Command' Flag;

c) checking the value of N(S) in Type-AD Transfer Frames.

6.3.2.2 Control Commands

In table 6-1, Events E7 and E8 are concerned with the execution of, respectively, an 'Unlock' Control Command and a 'Set V(R)' Control Command. The specification of each action in each box is self-explanatory. The action described for Event E8 in State (S3) means that the 'Set V(R)' Control Command is not executed (FARM-1 must be 'unlocked' first), but its receipt is accounted for by means of the FARM-B_Counter since the control command was validated as 'legal' and found 'executable'.

NOTE – The execution of an 'Unlock' Control Command resets only FARM-1, not the Higher Procedures. Some mechanism should be provided to ensure that the data management functions of the Higher Procedures purge/reset their buffers as required for operations of the protocol.

6.3.2.3 Buffer Release Signal

If an implementation provides a scheme for flow control between FARM-1 and the Higher Procedures and the flow control scheme ever results in the COP-1 Wait_Flag being set, the scheme must also provide a 'Buffer Release Signal', which corresponds to Event E10 in the FARM-1 State Table. In this case, FARM-1 shall be signaled when sufficient buffer space becomes available for at least one more maximum-size Frame.

6.3.2.4 CLCW

FARM-1 constantly provides some information to be sent back to FOP-1 in the CLCW (Event E11 in the FARM-1 State Table).

6.3.3 FARM-1 STATE TRANSITIONS

A summary of the way FARM-1 moves between states is depicted in figure 6-2.

Table 6-1: Table 6-1: FARM-1 State Table (Part 1)

State Name	OPEN	WAIT	LOCKOUT
Main Feature of State	Normal state to accept frames	Wait Flag is on	Lockout Flag is on
State Number	S1	S2	S3

Event Conditions			Event Number			
Valid User Data type AD frame arrives	N(S) = V(R)	A buffer is available for this frame	E1	Accept frame, V(R): = V(R) + 1, Retransmit Flag: = 0 (S1)	Not applicable	Discard (S3)
		No buffer is available for this frame	E2	Discard, Retransmit FLag: = l, Wait Flag: = 1 (S2)	Discard (S2)	Discard (S3)
	N(S) > V(R) and N(S) ?(V(R) + PW – 1) ie: inside positive part of sliding window and N(S) < > V(R)		E3	Discard, Retransmit Flag: = 1 (S1)	Discard (S2)	Discard (S3)
	N(S) < V(R) and N(S) ?(V(R) – NW) ie: inside negative part of sliding window		E4	Discard (S1)	Discard (S2)	Discard (S3)
	N(S) > (V(R) + PW – 1) and N(S) < (V(R) – NW) ie: outside of sliding window		E5	Discard, Lockout Flag: = 1 (S3)	Discard, Lockout Flag: = 1 (S3)	Discard (S3)

Table 6-1: FARM-1 State Table (Part 2)

		State Name	OPEN	WAIT	LOCKOUT
		State Number	S1	S2	S3
Valid User Data type BD frame arrives	E6		Accept, Increment FARM-B Counter (S1)	Accept, Increment FARM-B Counter (S2)	Accept, Increment FARM-B Counter (S3)
Valid Unlock type BC frame arrives	E7		Increment FARM-B Counter, Retransmit Flag: = 0 (S1)	Increment FARM-B Counter, Retransmit Flag: = 0, Wait Flag: = 0 (S1)	Increment FARM-B Counter, Retransmit Flag: = 0, Wait Flag: = 0, Lockout Flag: = 0 (S1)
Valid Set V(R) to V*(R) type BC frame arrives	E8		Increment FARM-B Counter, Retransmit Flag: = 0, V(R): = V*(R) (S1)	Increment FARM-B Counter, Retransmit Flag: = 0, Wait Flag: = 0, V(R): = V*(R) (S1)	Increment FARM-B Counter (S3)
Invalid frame arrives	E9		Discard (S1)	Discard (S2)	Discard (S3)
Buffer release signal	E10		Ignore (S1)	Wait Flag: = 0 (S1)	Wait Flag: = 0 (S3)
CLCW report time	E11		Report value of: V(R), Lockout Flag, Wait Flag, Retransmit Flag, FARM-B Counter (S1)	Report value of: V(R), Lockout Flag, Wait Flag, Retransmit Flag, FARM-B Counter (S2)	Report value of: V(R), Lockout Flag, Wait Flag, Retransmit Flag, FARM-B Counter (S3)

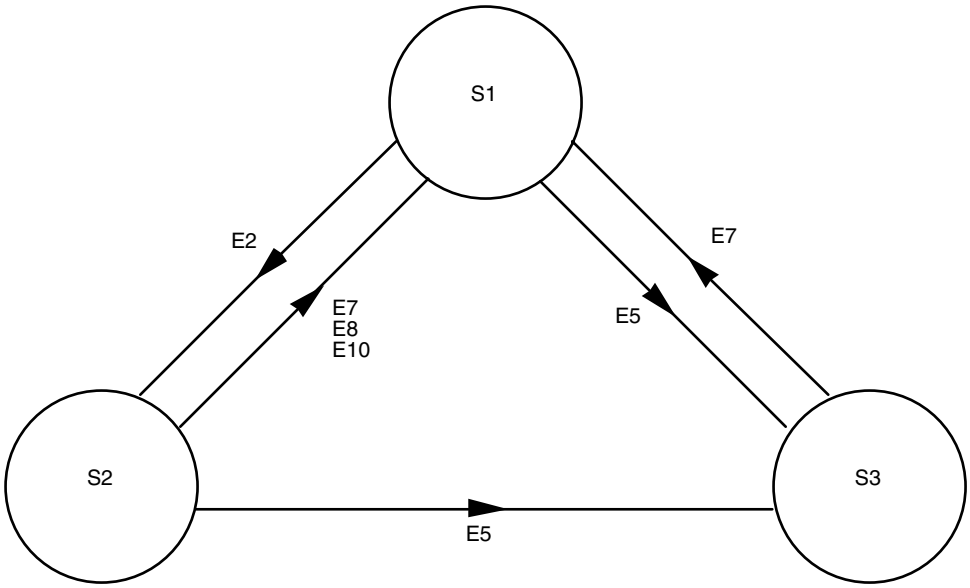

Figure 6-2: FARM-1 State Transitions

7 MANAGED PARAMETERS

7.1 OVERVIEW OF MANAGED PARAMETERS

In order to conserve bandwidth on the space link, some parameters associated with the Communications Operation Procedure-1 are handled by management rather than by an inline communications protocol. The managed parameters are those which tend to be static for long periods of time, and whose change generally signifies a major reconfiguration of the protocol entities associated with a particular mission. Through the use of a management system, management conveys the required information to the protocol entities.

In this section, the managed parameters used by the Communications Operation Procedure-1 are listed. These parameters are defined in an abstract sense and are not intended to imply any particular implementation of a management system.

7.2 FOP-1 MANAGED PARAMETERS

Table 7-1 lists the managed parameters used by FOP-1 for a Virtual Channel.

Table 7-1: FOP-1 Managed Parameters

Managed Parameter	Allowed Values
T1_Initial	Integer
Transmission_Limit	Integer
FOP_Sliding_Window_Width	1, 2, …or 255
Timeout_Type	0 or 1

7.3 FARM-1 MANAGED PARAMETERS

Table 7-2 lists the managed parameters used by FARM-1 for a Virtual Channel.

Table 7-2: FARM-1 Managed Parameters

Managed Parameter	Allowed Values
FARM_Sliding_Window_Width (W)	1, 2, … or 256
FARM_Positive_Window_Width (PW)	1, 2, … or 256
FARM_Negative_Window_Width (NW)	1, 2, … or 127
CLCW reporting period (seconds)	Real number

ANNEX A

GLOSSARY

(This annex **is not** part of the Recommendation)

AD	Acceptance Check (Bypass Flag = 0) and Data (Control Command Flag = 0)
BC	Bypass of Acceptance Check (Bypass Flag = 1) and Control (Control Command Flag = 1)
BD	Bypass of Acceptance Check (Bypass Flag = 1) and Data (Control Command Flag = 0)
CLCW	Command Link Control Word
COP	Communications Operation Procedure
FARM	Frame Acceptance and Reporting Mechanism
FDU	Frame Data Unit
FOP	Frame Operation Procedure
GVCID	Global Virtual Channel Identifier
K	FOP_Sliding_Window_Width
LLIF	Lower Layer Interface
N(R)	The Next Expected Frame Sequence Number in a CLCW
NN(R)	Expected_Acknowledgement_Frame_Sequence_Number (the value of N(R) from the previous CLCW on the same Virtual Channel)
N(S)	The Frame Sequence Number in the Transfer Frame Primary Header
NW	FARM_Negative_Window_Width
OSI	Open Systems Interconnection
PW	FARM_Positive_Window_Width
SS	Suspend_State
TC	Telecommand
TT	Timeout_Type

T1_Initial	The initial value to which the countdown Timer is set
VC	Virtual Channel
VCID	Virtual Channel Identifier
V(R)	Receiver_Frame_Sequence_Number (the value of N(S) expected to be seen by FARM-1 in the next Type-AD Transfer Frame on the Virtual Channel)
V(S)	Transmitter_Frame_Sequence_Number (the value of the Frame_Sequence_ Number, N(S), to be assigned by FOP-1 to the next Type-AD Transfer Frame to be transmitted)
W	FARM_Sliding_Window_Width

ANNEX B

INFORMATIVE REFERENCES

(This annex **is not** part of the Recommendation)

[B1] *Procedures Manual for the Consultative Committee for Space Data Systems.* CCSDS A00.0-Y-7.4. Yellow Book. Issue 7.4 (interim update). Washington, D.C.: CCSDS, January 2001.

[B2] *Telecommand: Part 2.1 Command Operation Procedures.* Recommendation for Space Data Systems Standards, CCSDS 202.1-B-2. Blue Book. Issue 2. Washington, D.C.: CCSDS, June 2001.

[B3] *Space Data Link Protocols—Summary of Concept and Rationale*. Draft Report Concerning Space Data System Standards, CCSDS 130.2-G-0.1. Draft Green Book. Issue 0.1. Sagamihara, Japan: ISAS, n.d.

[B4] *Telecommand: Part 2.1 Command Operation Procedures.* Recommendation for Space Data Systems Standards, CCSDS 202.1-B-1. Blue Book. Issue 1. Washington, D.C.: CCSDS, October 1991.

NOTE – Normative references are listed in 1.7.

ANNEX C

STATE TABLE FORMAT

(This annex **is not** part of the Recommendation)

This annex describes the format used for the FOP-1 and FARM-1 State Tables (tables 5-1 and 6-1).

For FOP-1 (table 5-1) or FARM-1 (table 6-1), the State Table shows the various 'States' (columns) in which the process might be at a given time, and the 'Events' (rows) which cause 'Actions' and/or state changes. The Actions and/or state change appropriate to the occurrence of a particular Event, when the process is in a particular State, are shown at the intersection of the respective row and column. State transitions are indicated by State numbers in parentheses; thus '(S2)' indicates 'go to State Number 2'. See figure C-1.

NOTE - Each of the State Tables describes the processing for one independent Virtual Channel.

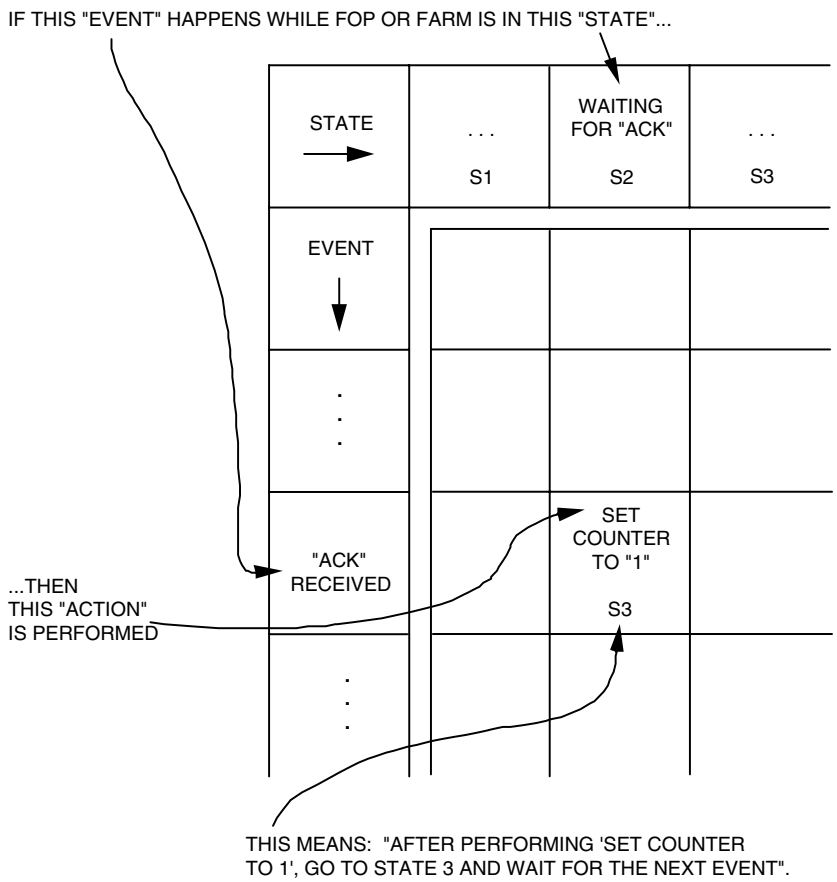

Figure C-1: Mapping of Terms That Have Been Changed

ANNEX D

CHANGES FROM REFERENCE [B2]

(This annex **is not** part of the Recommendation)

This Recommendation is developed from the specification in reference [B2], but a few technical details in [B2] have been changed based on experiences in using this procedure. These technical changes are described in D.1. Also, some technical terms in reference [B2] have been changed in order to unify the terminology used in all CCSDS Recommendations that define space link protocols. These terminology changes are listed in D.2.

D1 TECHNICAL CHANGES

D1.1 FARM-1 BUFFERS

In 2.2.2.10 of [B2] it is stated that FARM-1 should have one 'front-end' buffer and at least one 'back-end' buffer. However, the FARM-1 State Table does not use the distinction between front-end and back-end buffers. Therefore the notion of front-end and back-end buffers is no longer used in this Recommendation. It is only assumed that FARM-1 uses some buffers for storing incoming and outgoing data and these buffers are managed by FARM-1.

D1.2 FDU ABORTED INDICATION

In 2.3.2 of [B2] it is stated that the FDU Arrived Indication should have a parameter called FDU Aborted Indication. However, based upon experience implementing COP-1, it has been discovered that there are multiple ways for delivering this information without affecting interoperability among different implementations. Therefore this parameter is defined as an optional signal in this Recommendation (in 3.2.2).

D2 TERMINOLOGY CHANGES

Table D-1 lists the terms that have been changed from reference [B2].

Table D-1: Mapping of Terms That Have Been Changed

Terms Used in Reference [B2]	Terms Used in This Recommendation
Command Link Control Word	Communications Link Control Word
Command Operation Procedure	Communications Operation Procedure
Frame Header	Transfer Frame Primary Header
TC Frame Data Unit	Frame Data Unit
TC User Data Unit	Service Data Unit
Transfer Layer	Transfer Sublayer